ITEM #	QTY	NEWMAR #	DESCRIPTION
1	1	144656	3/4" MOLDED FIBERGLASS COVER

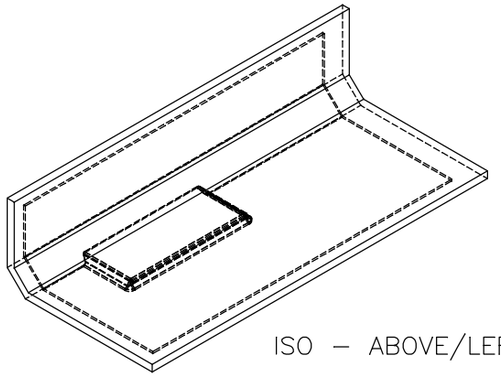

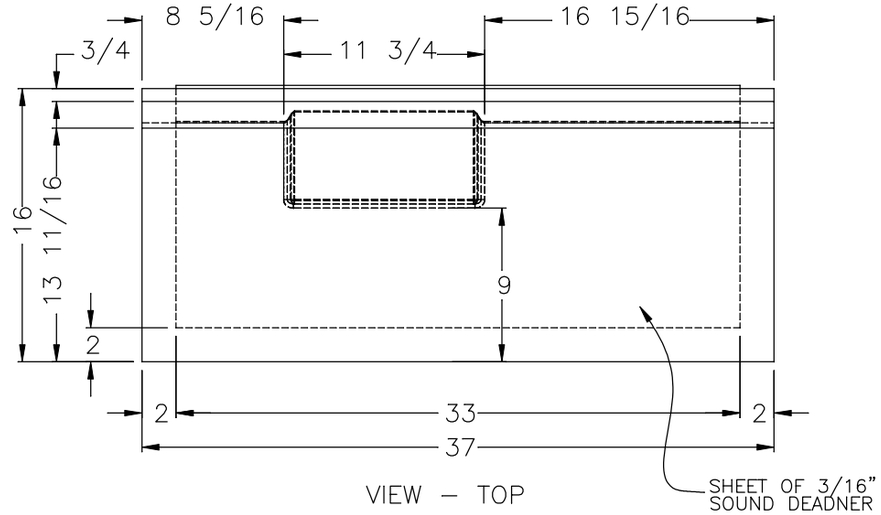

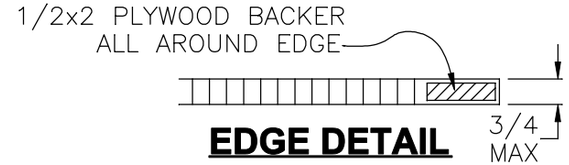

EDGE DETAIL

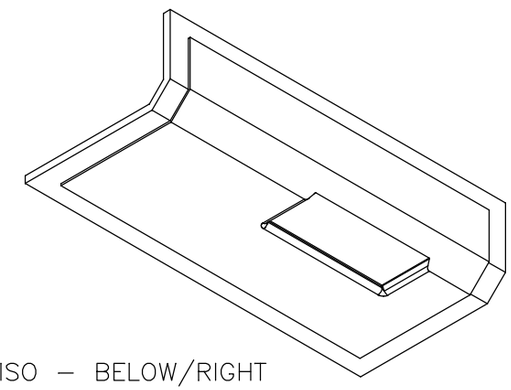

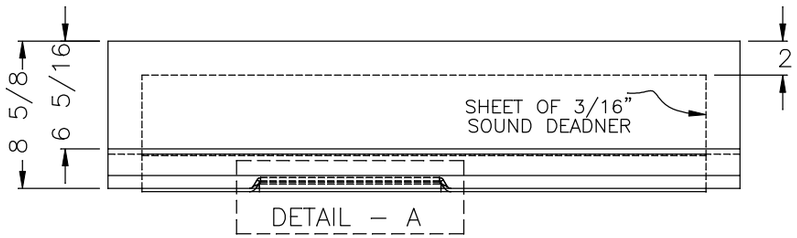

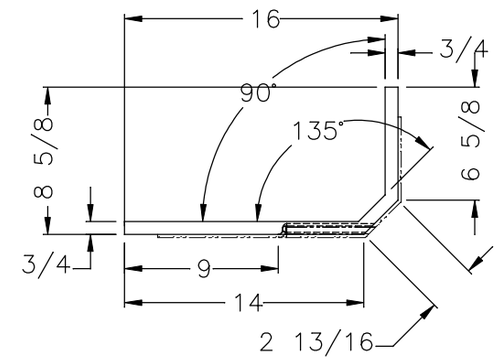

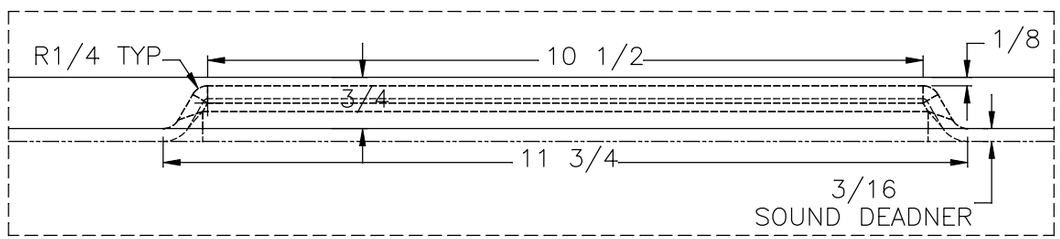

DETAIL – A
SCALE 4:1

FIBERGLASS MOLDED COVER

FILLED WITH HONEY–COMB

NEWMAR CORP *P.O. Box 30, Nappanee, IN. 46550*	Model: NADP 35' – SEE INDEX	Sheet 1 OF 1	Drawn by: K. B.	Checked by: B. L. G.	Revision: NEW DRAWING FOR 2020 – NADP 35' UNITS.	By: K. B.
						Date:BLG 11/27/18
UNITS: INCHES	Title: ENGINE COVER	I.D. # 2020\DP\FRAME\PARTS\NADP_EC_35	Date: 8/7/18	Date: 11/27/18	Revision:	By:
TITLE BLOCK: 1–5TB						Date: