ITEM #	QTY	NEWMAR #	DESCRIPTION
1	1	145464	STEP BRACKET #1 – MAIN LEFT

MATERIAL: 1/8" STEEL; POWDERCOAT BLACK

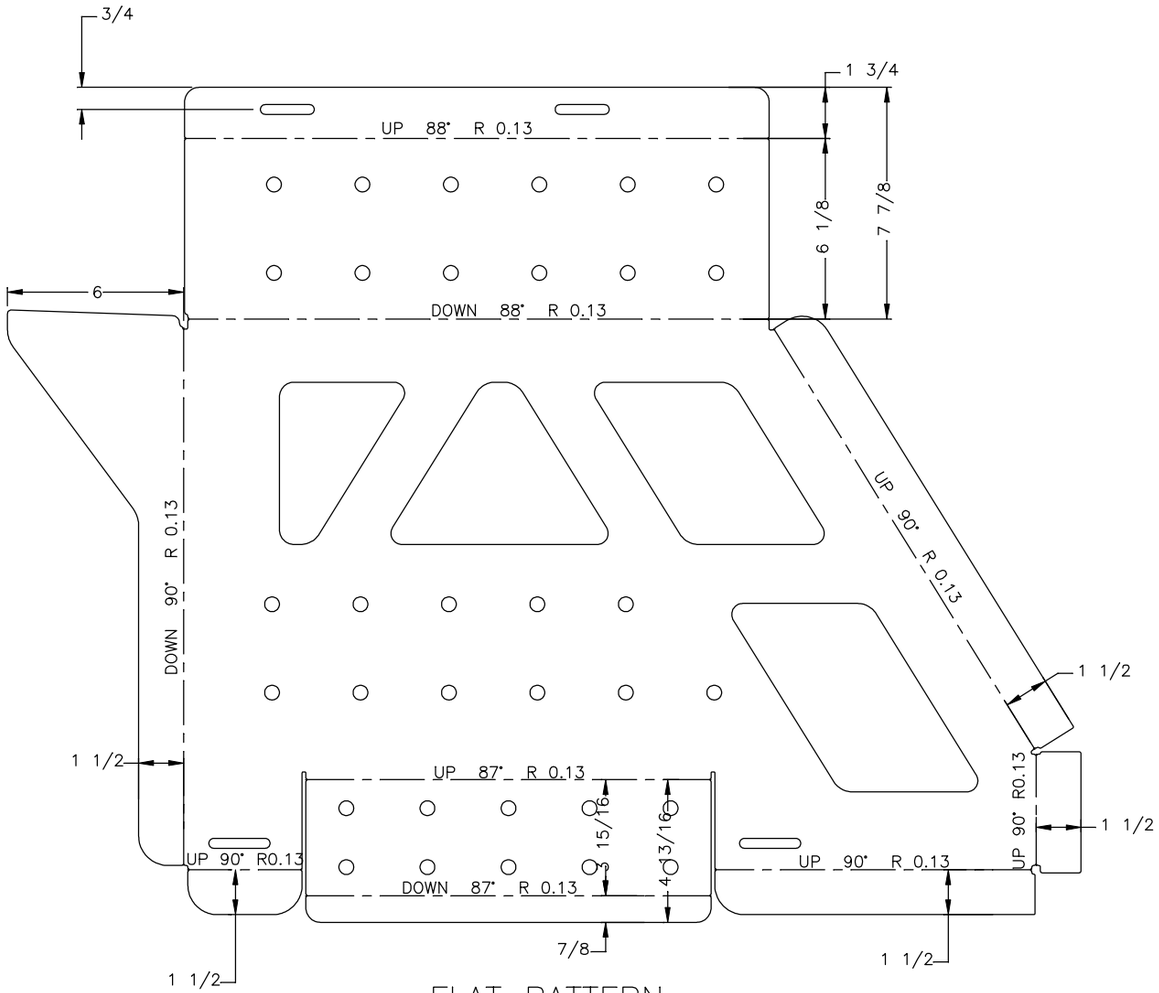

FLAT PATTERN

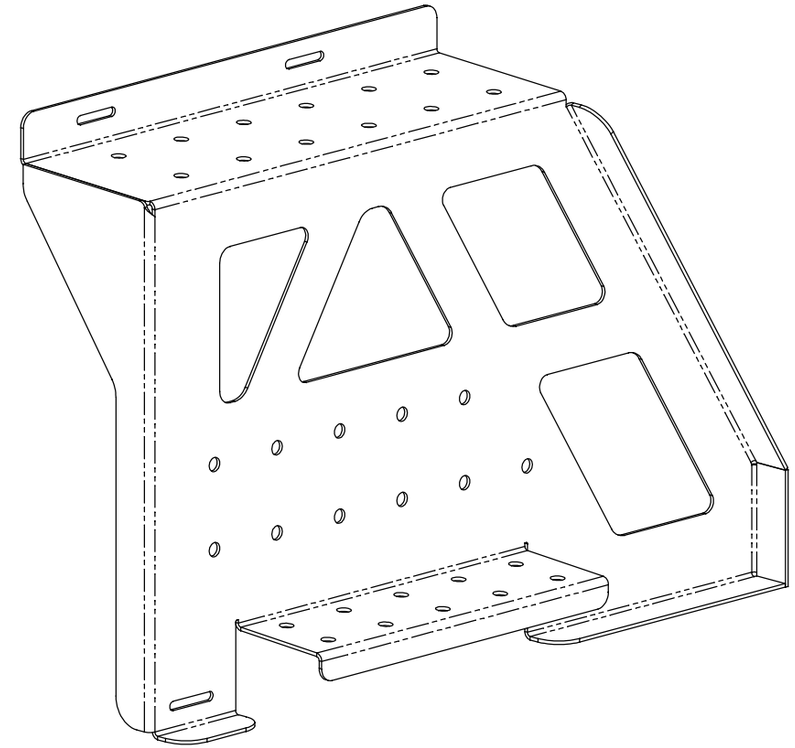

ISO VIEW

NEWMAR CORP P.O. Box 30, Nappanee, IN. 46550	Model: SACC (SEE INDEX)	Sheet 1 OF 2	Drawn by: H. Y.	Checked by:	Revision:	By:
						Date:
UNITS: INCHES	Title: STEP BRACKET (MAIN LEFT)	I.D. # 2020\CC\FRAME\SA\STEP_BRKT_SA1_LFT	Date: 12/13/18	Date:	Revision:	By:
TITLE BLOCK: 75TB						Date: