ITEM #	QTY	NEWMAR #	DESCRIPTION
1	1	146221	HINGE BRACKET BACKER – POWER COAT BLACK
2	1	146222	HINGE BRACKET BACKER – POWER COAT BLACK

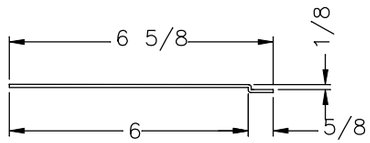

SECTION A–A

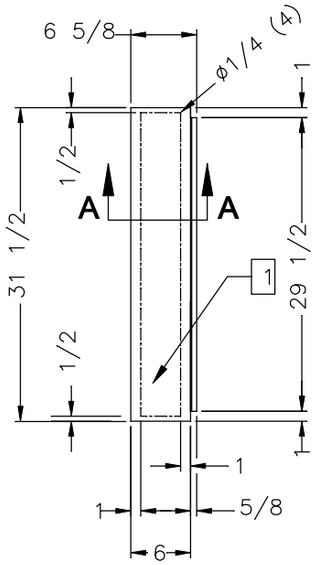

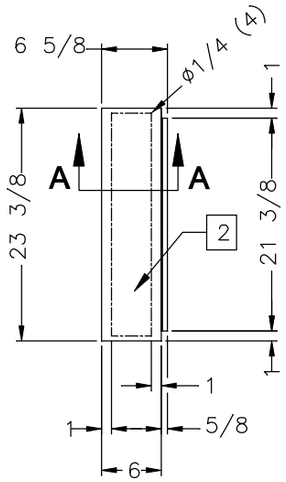

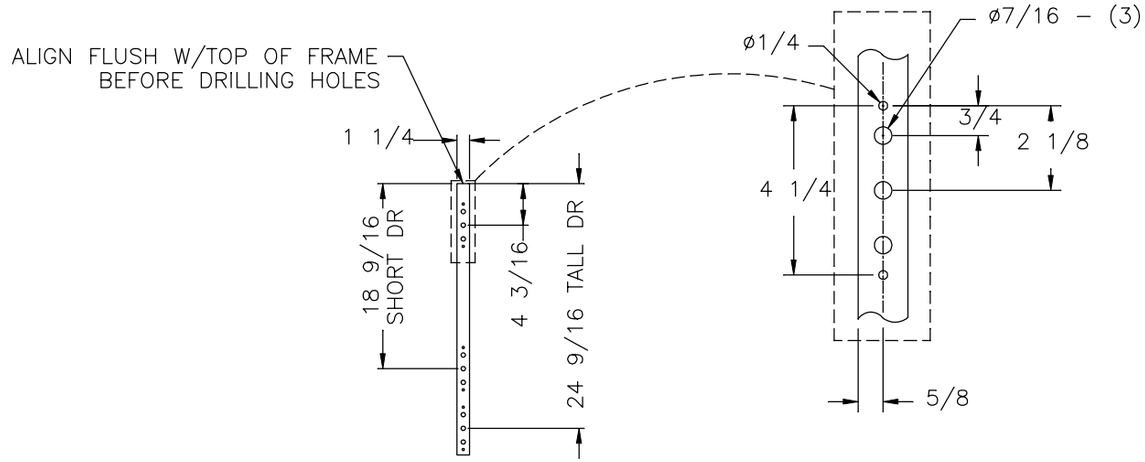

TEMPLATE FOR LOCATING HINGE HOLE LOCATIONS

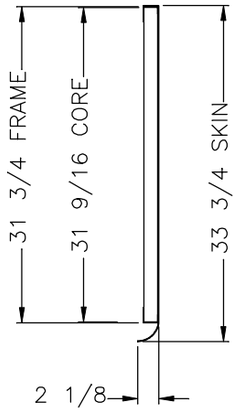

SIDE HINGE –FULL HEIGHT

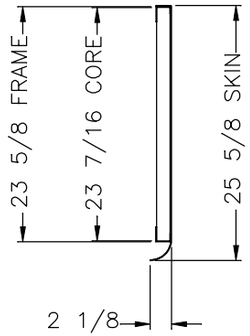

SIDE HINGE –BELOW S–O

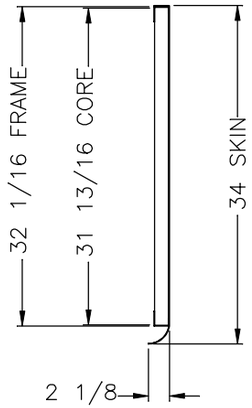

TOP HINGE – FULL HEIGHT

NEWMAR CORP *P.O. Box 30,* *Nappanee, IN. 46550*	Model: DS DP (SEE INDEX)	Sheet 1 OF 1	Drawn by: V. K.	Checked by: B. B.	Revision:	By:
						Date:
Title block––5TB	Title: STORAGE DOOR DETAILS	I.D. # 2020\DP\PROFILE\DS\ST_DOOR_DET	Date: 10/4/18	Date: 10/10/18	Revision:	By:
						Date: