ITEM #	QTY	NEWMAR #	DESCRIPTION
1	1	146223	ELECTR. COMPONENT FRT BOX

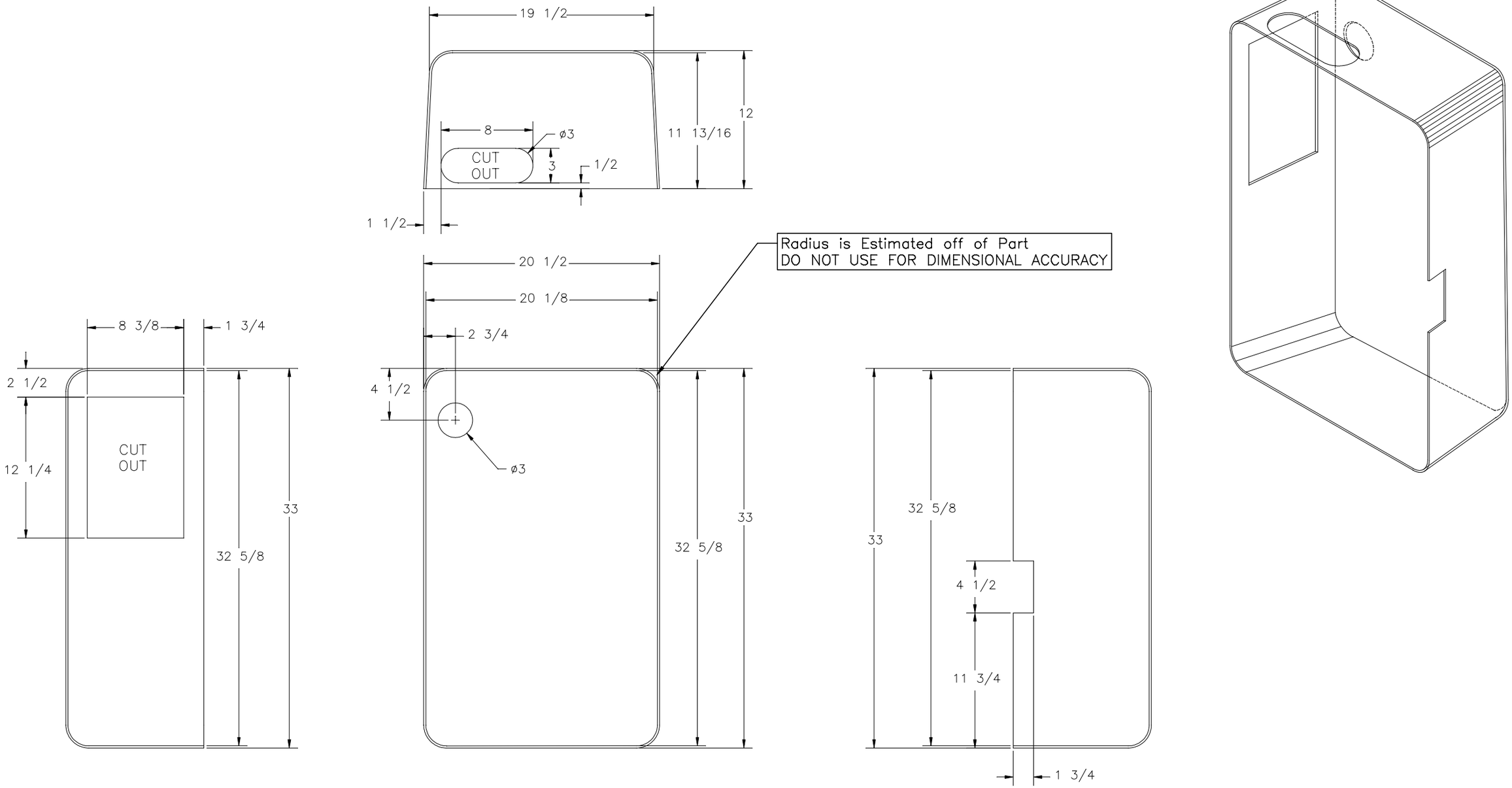

NEWMAR CORP P.O. Box 30, Nappanee, IN. 46550	Model: KS/VT/DS (SEE INDEX)	Sheet 1 OF 1	Drawn by: D. E.	Checked by: B. B.	Revision: MOVED 3" HOLE DOWN TO 4 1/2" ILO 2 3/4" (PCR #201032)	By: E. C. Date:BB 6/3/19
UNITS: INCHES TITLE BLOCK: 1-2FULTB	Title: FRONT ELECTRICAL COMPONENT BOX	I.D. # 2020\DP\FRAME\PARTS\MISC4015	Date: 8/3/18	Date: 10/10/18	Revision: ADDED CUT-OUTS AND VIEWS. (PCR #200945)	By: V. K. Date:BB 5/17/19