= MAIN
= ACCENT

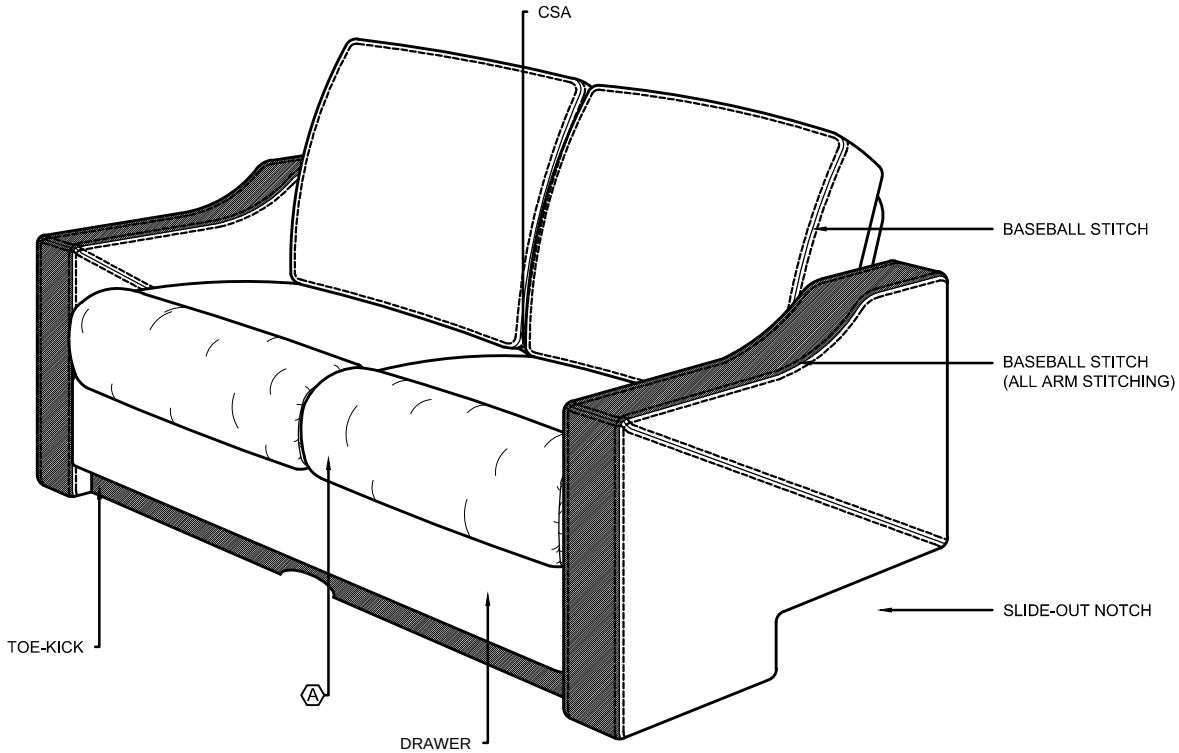

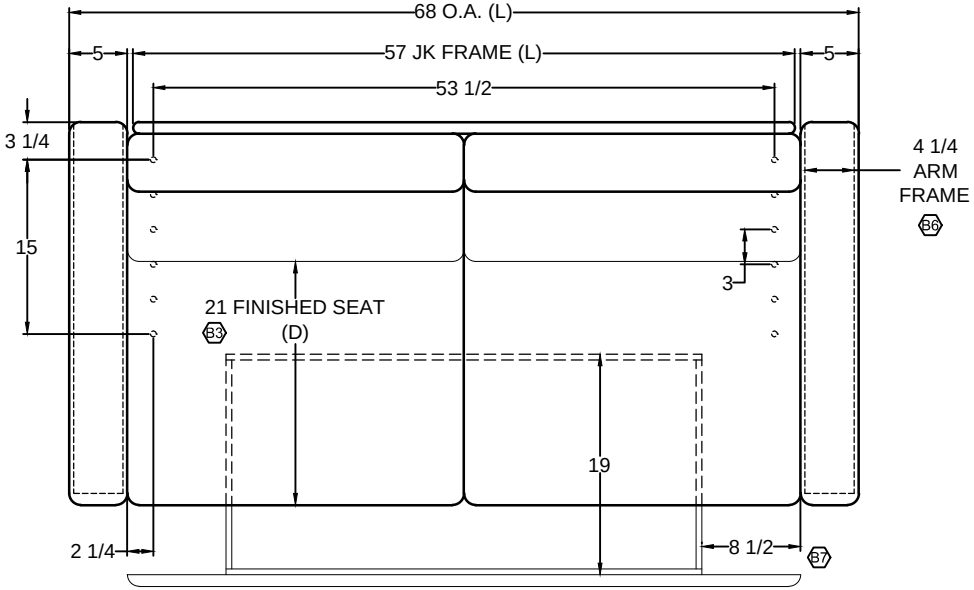

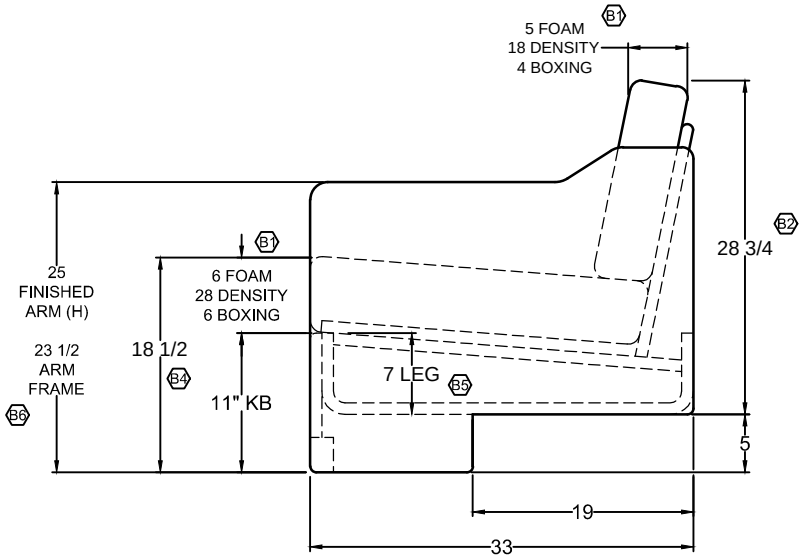

VILLA INTERNATIONAL	13760 Midway St. Cerritos, CA 90703 Tel 562-404-8111 Fax 562-404-7781	TITLE 2019 MOUNTAIN AIRE CSA - 68" TV JACK KNIFE SOFA (RAISED FLOOR)	DWG. NO. VI2000638	REV. B	APV FTBM 01.02.19	SCALE 1:1 DO NOT SCALE DRAWING. UNLESS OTHERWISE SPECIFIED DIMENSIONS ARE IN INCHES.	
			DR A.CERVANTES	DATE 09.05.17			

THIS DRAWING IS THE PROPERTY OF VILLA INTERNATIONAL MFG. ALL RIGHTS RESERVED.

JA	B	[1] ADDED SEAT AND BACK FOAM DIMENSIONS. [2] ADDED 28-3/4" HEIGHT FROM S.O. DIMENSION. [3] CHANGED SEAT DEPTH TO 21"; WAS 22". [4] ADDED 18-1/2" SEAT HEIGHT DIMENSION. [5] ADDED 7" LEG HEIGHT DIMENSION. [6] ADDED ARM FRAME DIMENSIONS. [7] ADDED DRAWER DIMENSIONS. (REF ORD# 0133645)	12.28.18
JA	A	PER RL, REMOVED CUSHION WRAP FROM SEATS.	02.19.18

REVISIONS