CUT PATTERN	
BACK FRAME NO.	
BASE FRAME NO.	
WOOD PATTERN	

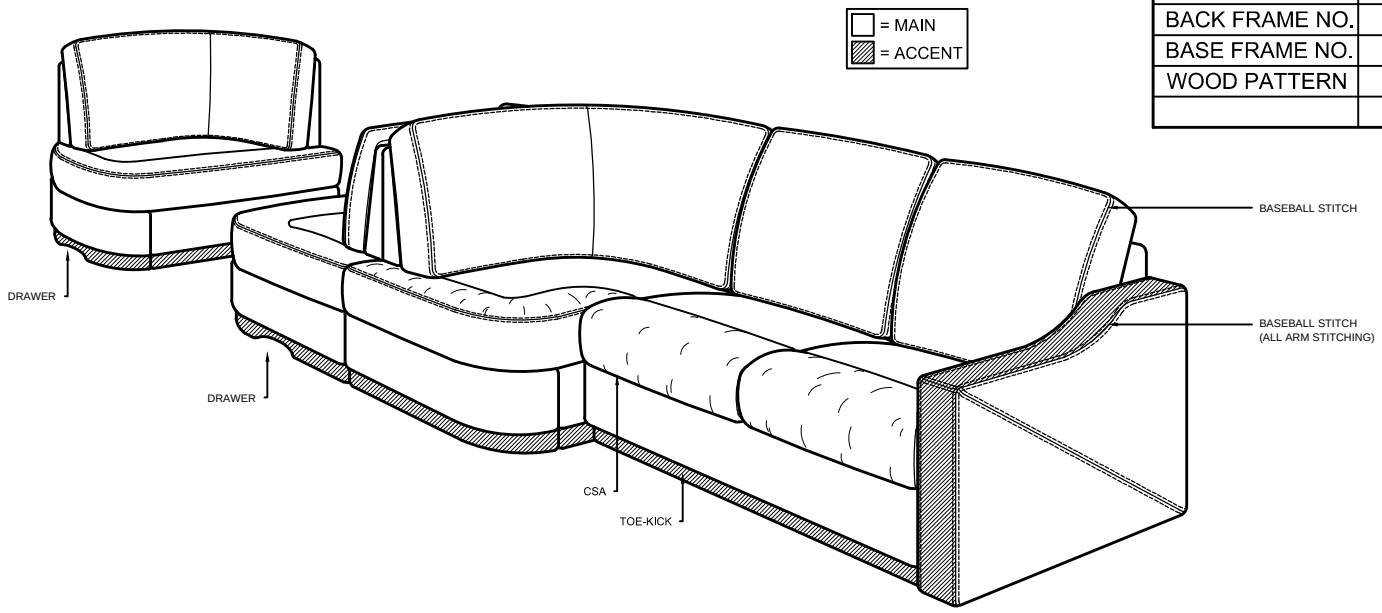

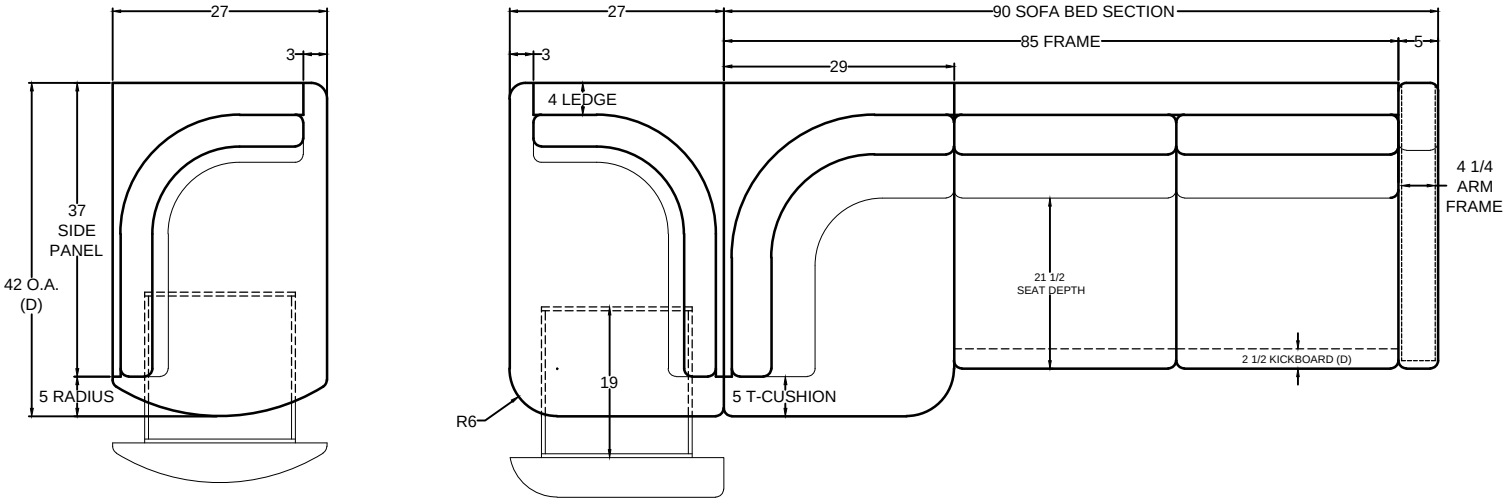

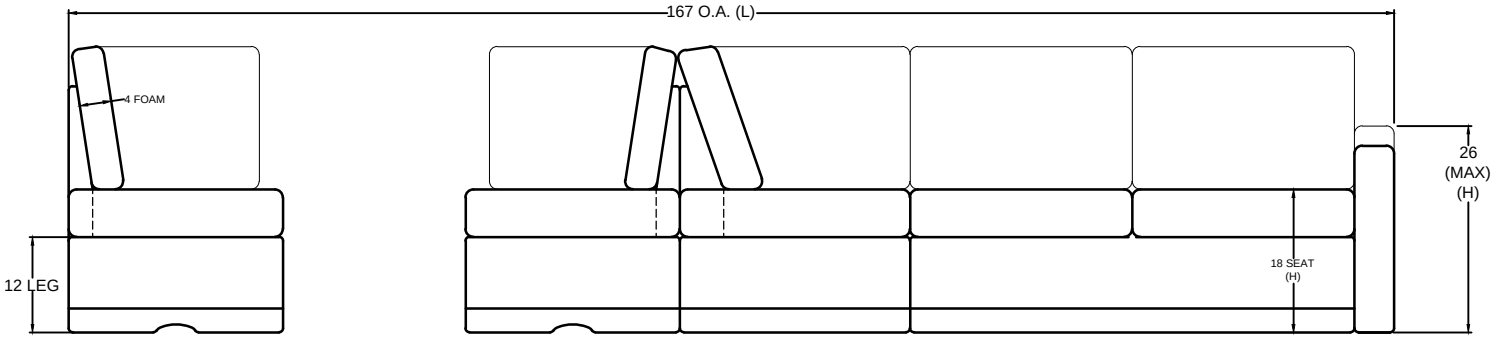

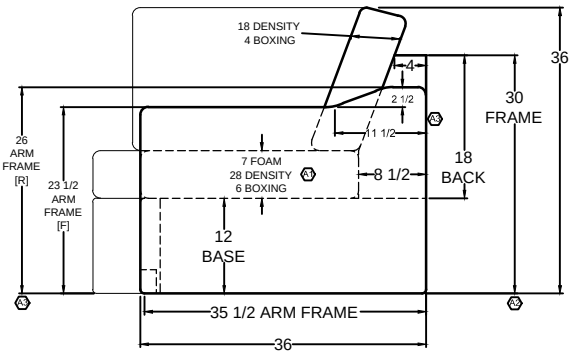

VILLA INTERNATIONAL
13760 Midway St.
Cerritos, CA 90703
Tel 562-404-8111
Fax 562-404-7781

TITLE
2019 MOUNTAIM AIRE
CSA - 167" SOFA BED / F2F
DINETTE ENSEMBLE

DWG. NO. VI3000547 | REV. A | APV --

DR J.ANCHETA | DATE 01.07.19

SCALE 1:1
DO NOT SCALE DRAWING.
UNLESS OTHERWISE SPECIFIED DIMENSIONS ARE IN INCHES.

THIS DRAWING IS THE PROPERTY OF VILLA INTERNATIONAL MFG. ALL RIGHTS RESERVED.

JA	A	PRODUCTION UPDATE: [1] ADJUST SEAT CUSHION DETAILS. [2] ADD 30" FRAME HEIGHT DIMENSION. [3] ADD ARM FRAME DETAILS.	02.14.19

REVISIONS