ITEM #	QTY	NEWMAR #	DESCRIPTION
1	1	148178	LATCH PIN BRACKET, REAR DOOR

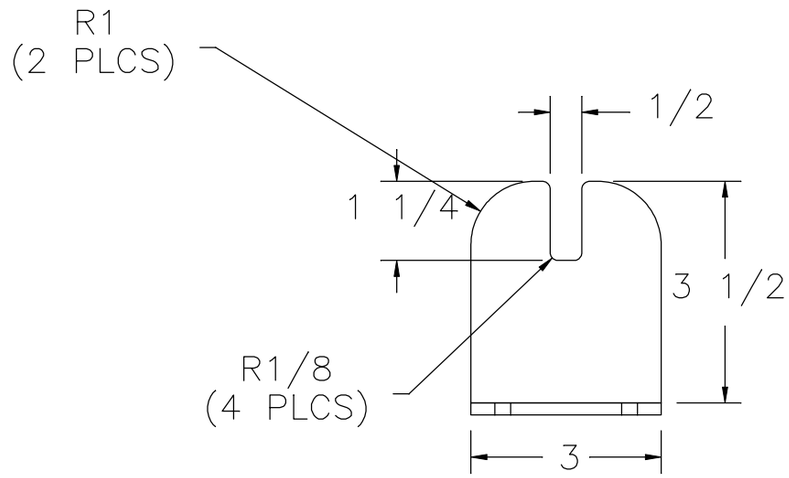

FRONT VIEW

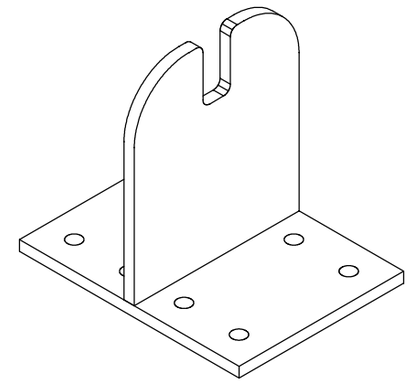

ISO VIEW

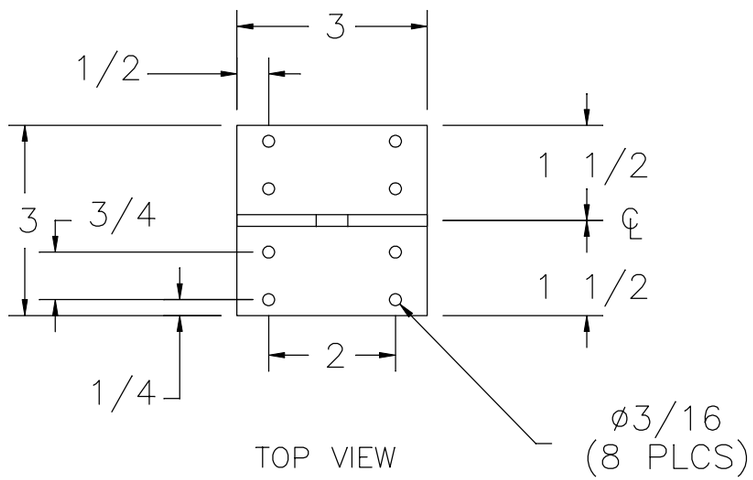

TOP VIEW

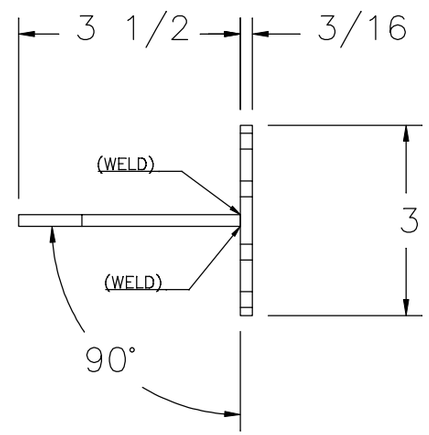

SIDE VIEW

NOTE: 7 GA. STEEL; POWDER-COAT BLACK

NEWMAR CORP P.O. Box 30, Nappanee, IN. 46550	Model: SSCC/SACC	Sheet 1 OF 1	Drawn by: J. S.	Checked by: R. R.	Revision: O.A. 3 ILO4 / 3/16 HOLES RELOCATED 1/4 ILO 1 / 23/4 ILO 1 / 1/2" NOTCH 1 1/4 ILO 1, (PCR # 200648) — By: H. Y. — Date:RR 3/8/19
UNITS: INCHES TITLE BLOCK: 1TB	Title: LATCH PIN BRACKET	I.D. # 2020\CC\PROFILE\PARTS\MISC4012	Date: 12/21/18	Date: 1/10/19	Revision: NEW REPLACES REAR DOOR LATCH MOUNT BRKT.2020\\CC\PROFILE\PARTS\MISC4011 — By: H. Y. — Date:RR 1/10/19