ITEM #	QTY	SHEET #	NEWMAR #	DESCRIPTION
1	1	-	148408	BRKT FRONT CAP REINFORCEMENT DR. SIDE
2	1	-	148409	BRKT FRONT CAP REINFORCEMENT PASS. SIDE

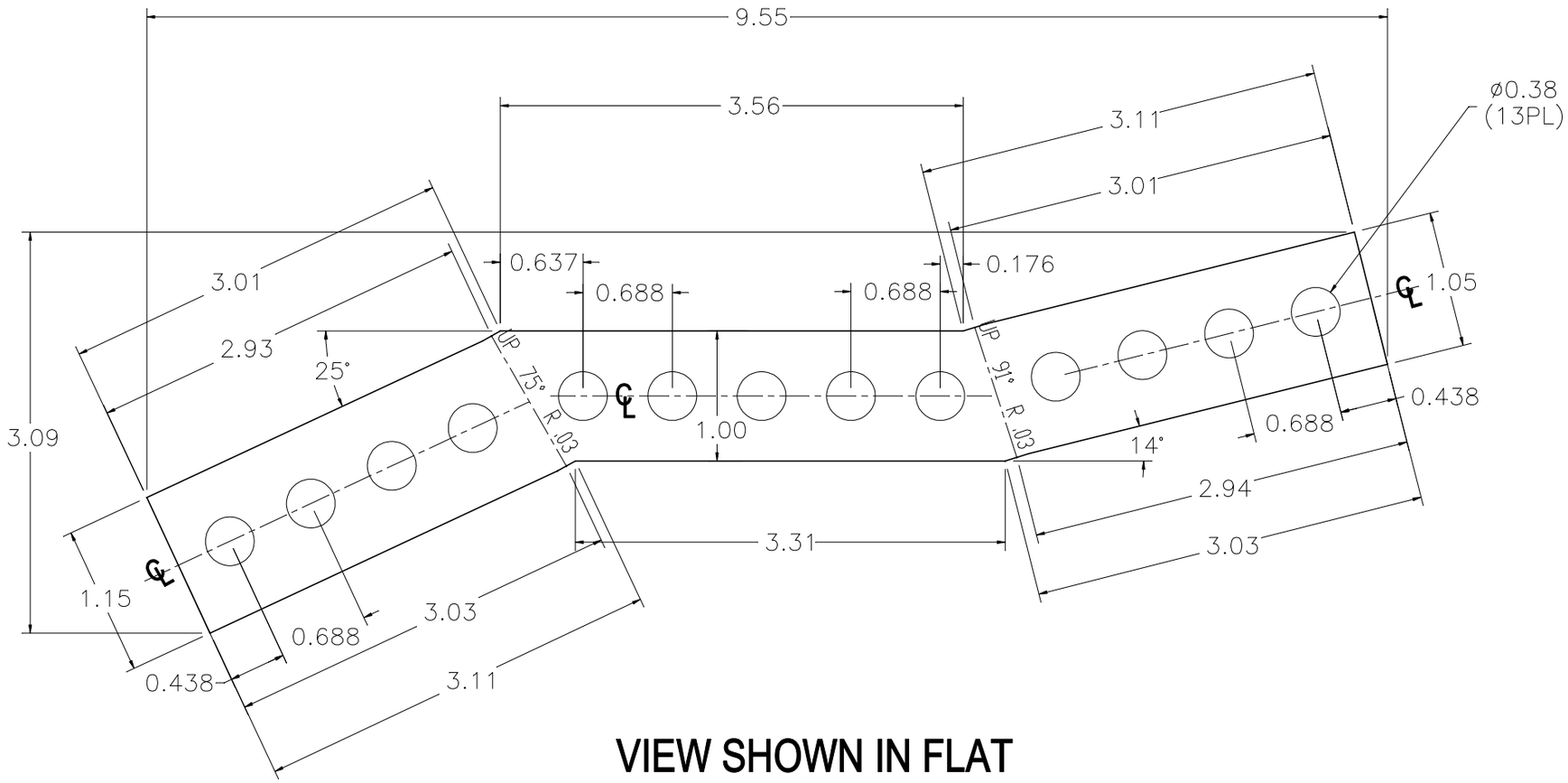

VIEW SHOWN IN FLAT

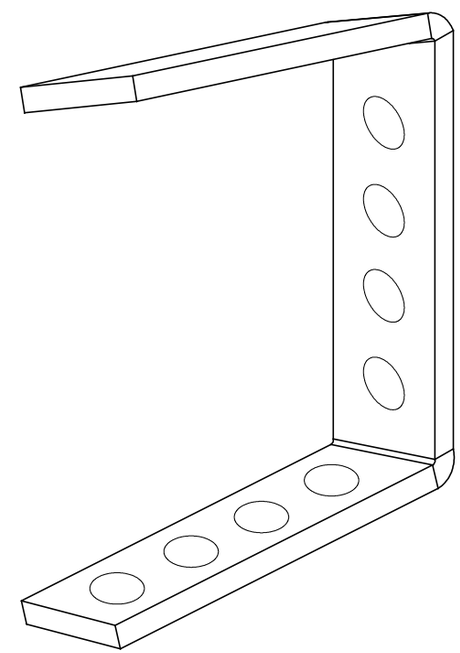

NOTES:
1.) MATERIAL TO BE 7GA STEEL
2.) FINISH TO BE RAW UNCOATED
3.) 148408 SHOWN, REVERSE BENDS FOR 148409.

NEWMAR CORP P.O. Box 30, Nappanee, IN. 46550	Model: DS DP (SEE INDEX)	Sheet 1 of 1	Drawn by: V. K.	Checked by: B. B.	Revision: UPDATED PRINT'S NOTES. (PCR #192104)	By: V. K. Date: BB 3/1/19
UNITS: INCHES	Title: FRONT CAP REINFORCEMENT BRACKET	I.D. # 2019\COMPONENTS\MISC3015	Date: 2/11/19	Date: 2/11/19	Revision: ADDED HOLES TO THE BRACKET, REV. PART NUMBERS. (ECO #643)	By: V. K. Date: BB 2/11/19
TITLE BLOCK: 1-2FULTB						