ITEM #	QTY	NEWMAR #	DESCRIPTION
1	1	148438	BRKT COLUMN A–LFT
2	1	148439	BRKT COLUMN A–RT
3	2	148440	BRKT COLUMN B
4	2	148441	BRKT COLUMN C
5	4	148442	BRKT COLUMN D
7	1	149095	KIT BRKT COLUMN

*PARTS TO BE POWDER COATED BLACK

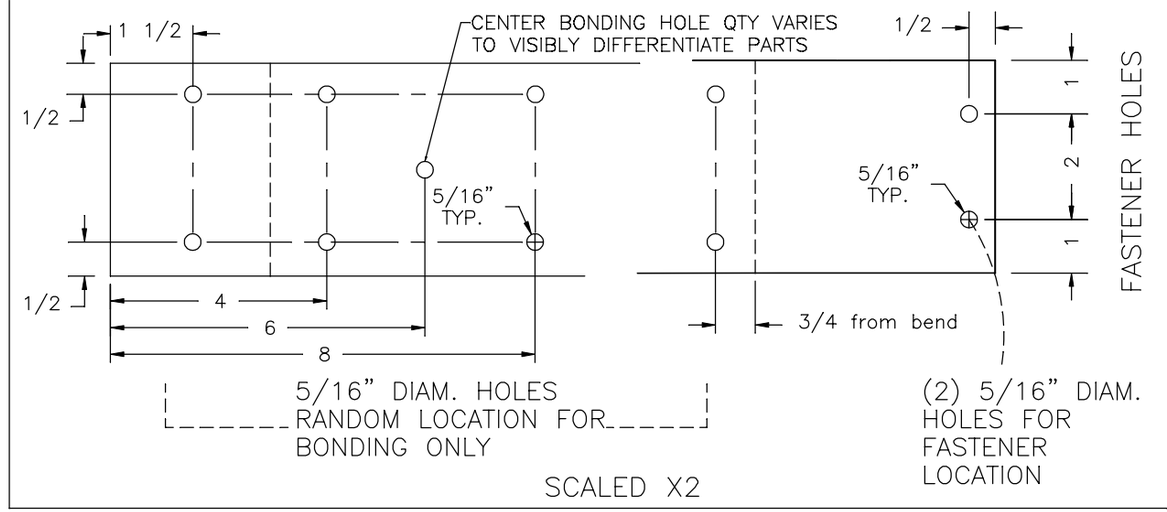

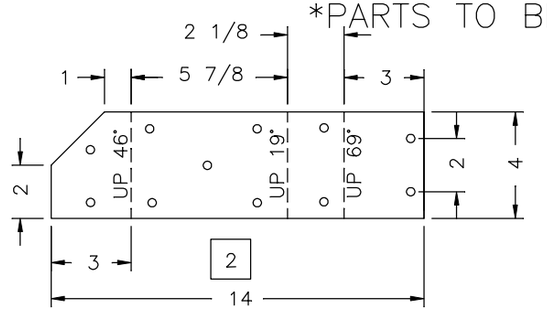

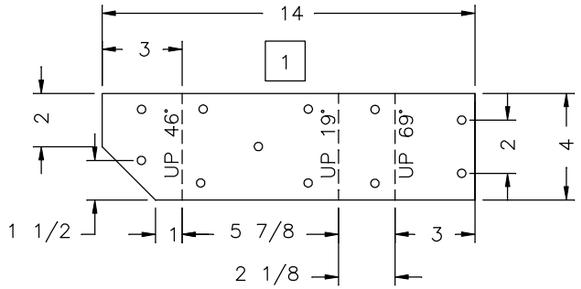

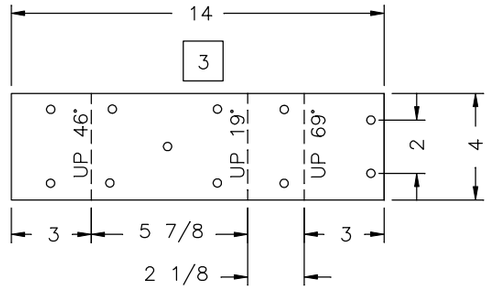

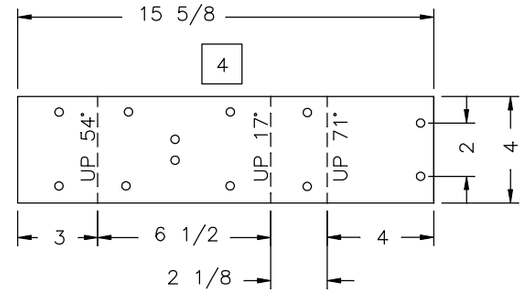

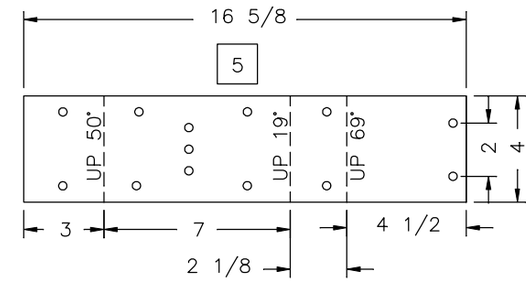

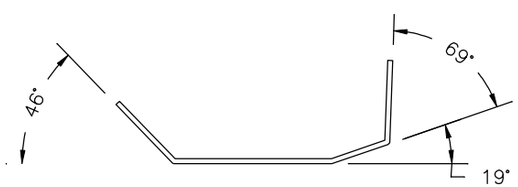

SIDE VIEW
BENT PART A
(2) REQ'D–L&R

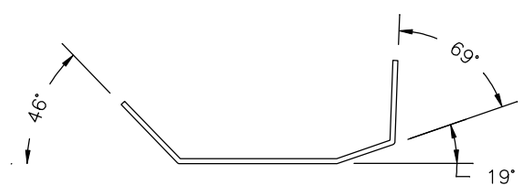

SIDE VIEW
BENT PART B
(2) REQ'D

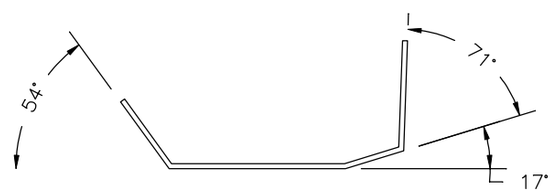

SIDE VIEW
BENT PART C
(2) REQ'D

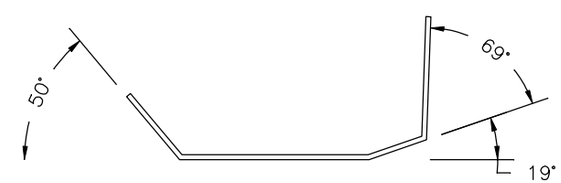

SIDE VIEW
BENT PART D
(4) REQ'D

NEWMAR CORP P.O. Box 30, Nappanee, IN. 46550	Model: SSCC/SACC	Sheet 1 OF 2	Drawn by: J. S.	Checked by: R. R.	Revision: ADDED PART NUMBERS TO PARTS ON PRINT (PCR # 201755) — By: H. Y. — Date: EC 8/19/19
UNITS: INCHES TITLE BLOCK: 1TB	Title: COLUMN BRACKETS	I.D. # 2020\CC\PROFILE\PARTS\COLUMN_BRKTS	Date: 1/31/19	Date: 2/15/19	Revision: SETUP PARTS KIT (PARTS 1 THRU 6 KIT UNDER PART # 149095) (PCR 200904) — By: H. Y. — Date: RR 5/7/19

ITEM #	QTY	NEWMAR #	DESCRIPTION
6	3	148443	BRKT COLUMN E
7	1	149095	KIT BRKT COLUMN

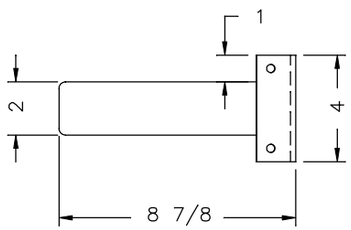

TOP VIEW

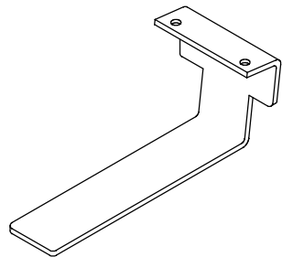

ISO VIEW

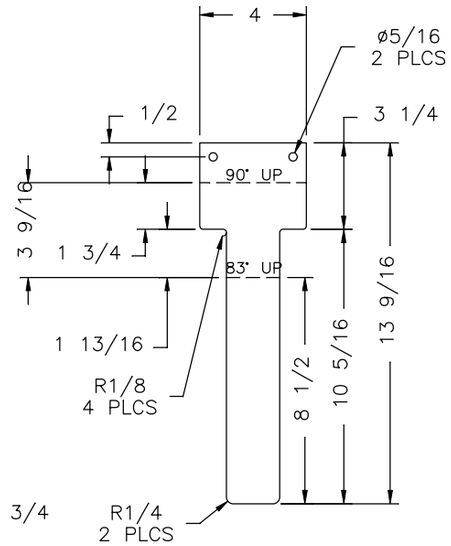

FLAT PATTERN

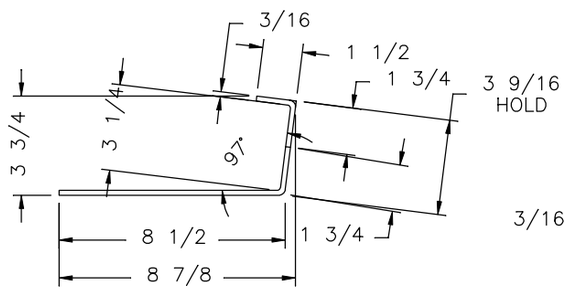

SIDE VIEW

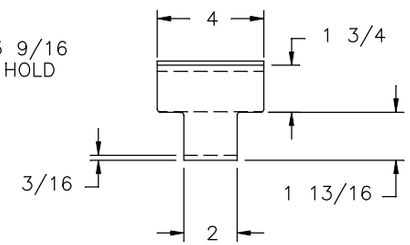

END VIEW

6 MATERIAL: 7 GA STEEL; POWDER COATED BLACK

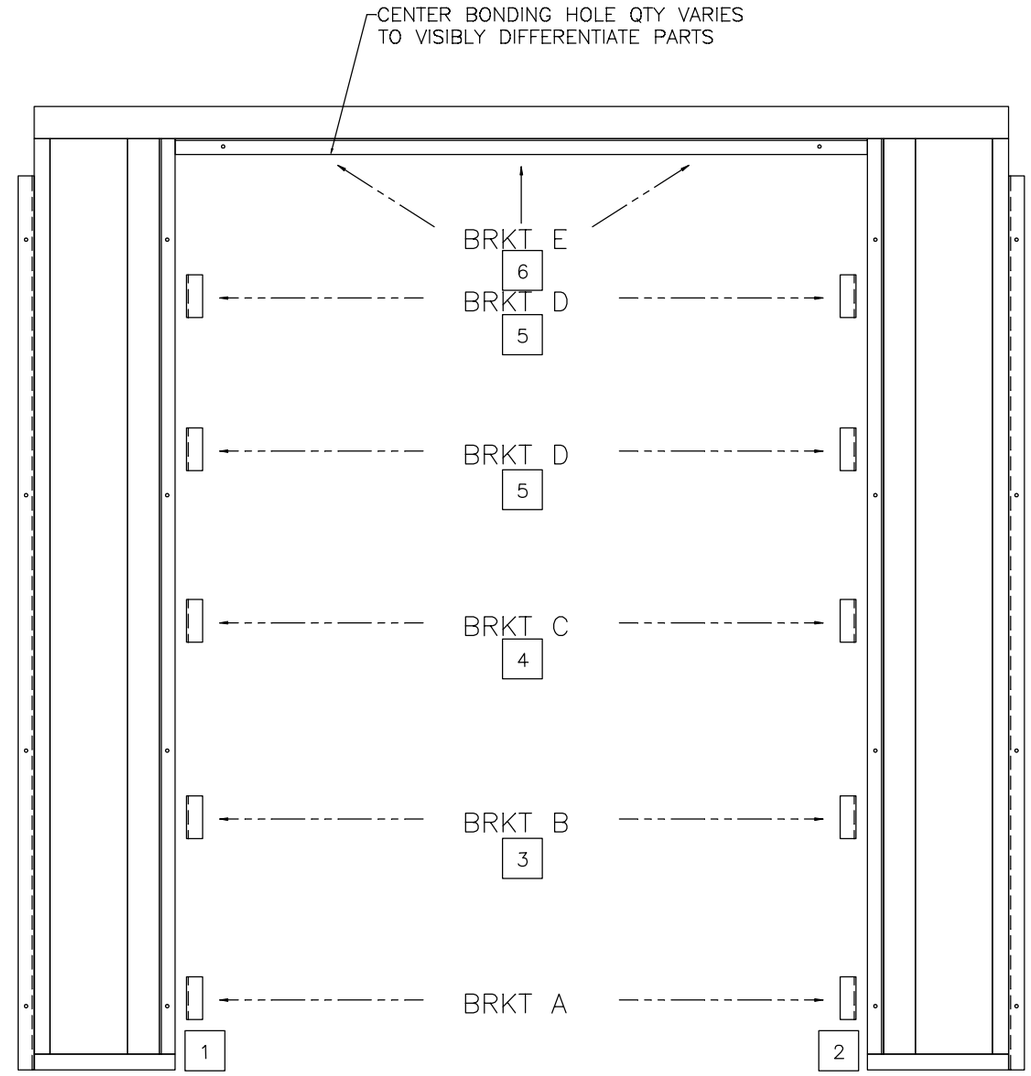

LOCATION OF COLUMN BRACKETS
(FRONT WALL NOT DRAWN TO SCALE)

NEWMAR CORP P.O. Box 30, Nappanee, IN. 46550	Model: SSCC/SACC	Sheet 2 OF 2	Drawn by: J. S.	Checked by: R. R.	Revision: Moved mounting holes on bracket E 1/8" forward and added dimensions to flat pattern to show holes 1/2" inboard (PCR #202189) — By: R. W. — Date: EC 12/4/19
UNITS: INCHES TITLE BLOCK: 1TB	Title: COLUMN BRACKETS	I.D. # 2020\CC\PROFILE\PARTS\COLUMN_BRKTS	Date: 1/31/19	Date: 2/15/19	Revision: REVISE BRACKET "E" TO BE SINGLE FORMED PART ILO WELDED ASSEMBLY (ECO #441). — By: J. S. — Date: EC 9/23/19