ITEM #	QTY	NEWMAR #	DESCRIPTION
1	1	149581	GENERATOR TRAY LH/RH ONAN
2	2	–	1/4 x 2 x 28 1/4 FLAT PLATE
3	4	–	1/8 x 1 1/2 x 7 FLAT PLATE – GUSSET ADDED IN HOUSE

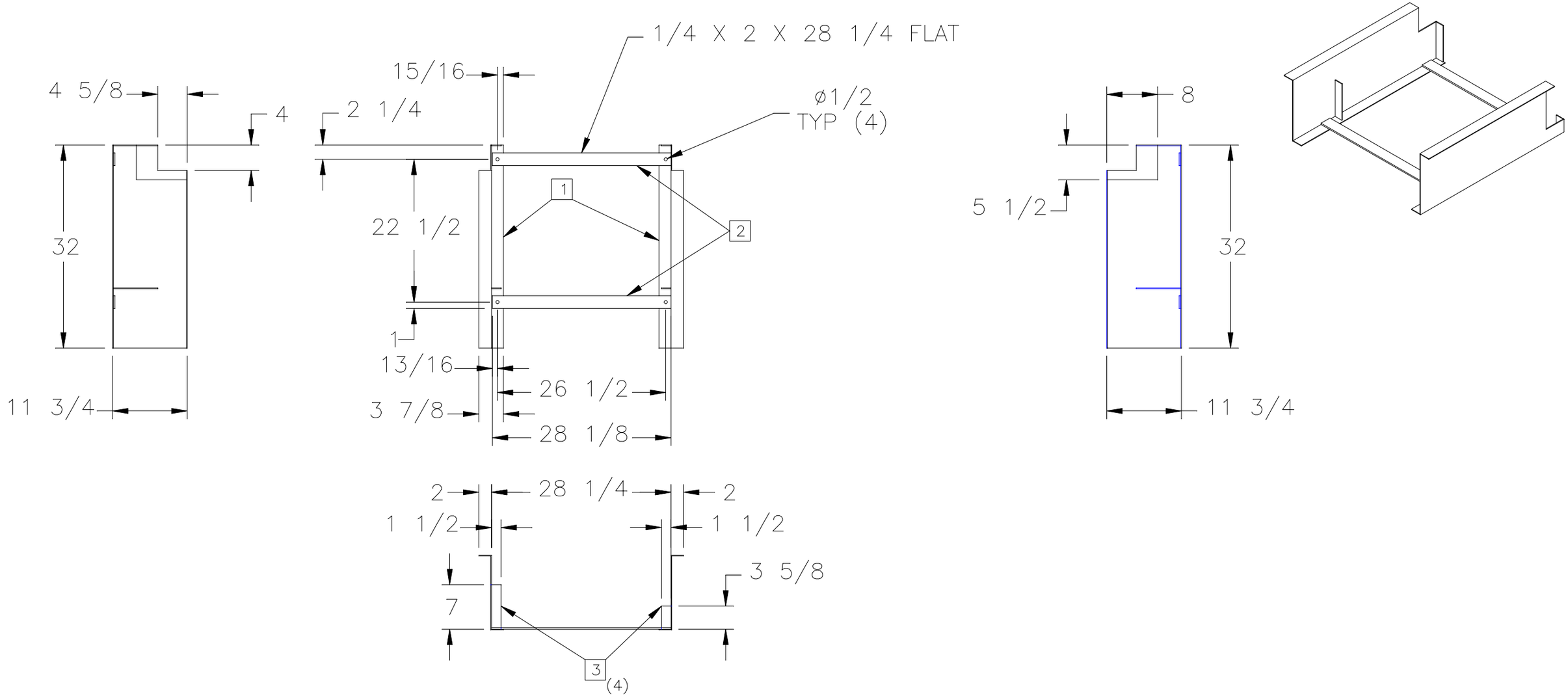

NEWMAR CORP P.O. Box 30, Nappanee, IN. 46550	Model: NADP	Sheet 1 OF 1	Drawn by: G. Y.	Checked by: E. C.	Revision:	By:
						Date:
UNITS: INCHES	Title: GENERATOR TRAY FOR ONAN 8.0	I.D. # 2021\HE\FRAME\PARTS\MISC5016	Date: 8/19/19	Date: 8/30/19	Revision:	By:
TITLE BLOCK: 1TB						Date: