| ITEM # | QTY | NEWMAR # | DESCRIPTION |
|---|---|---|---|
| 2 | 1 | 149960 | BRKT TANK FRESH WATER |

(SACC 4573, 4577)

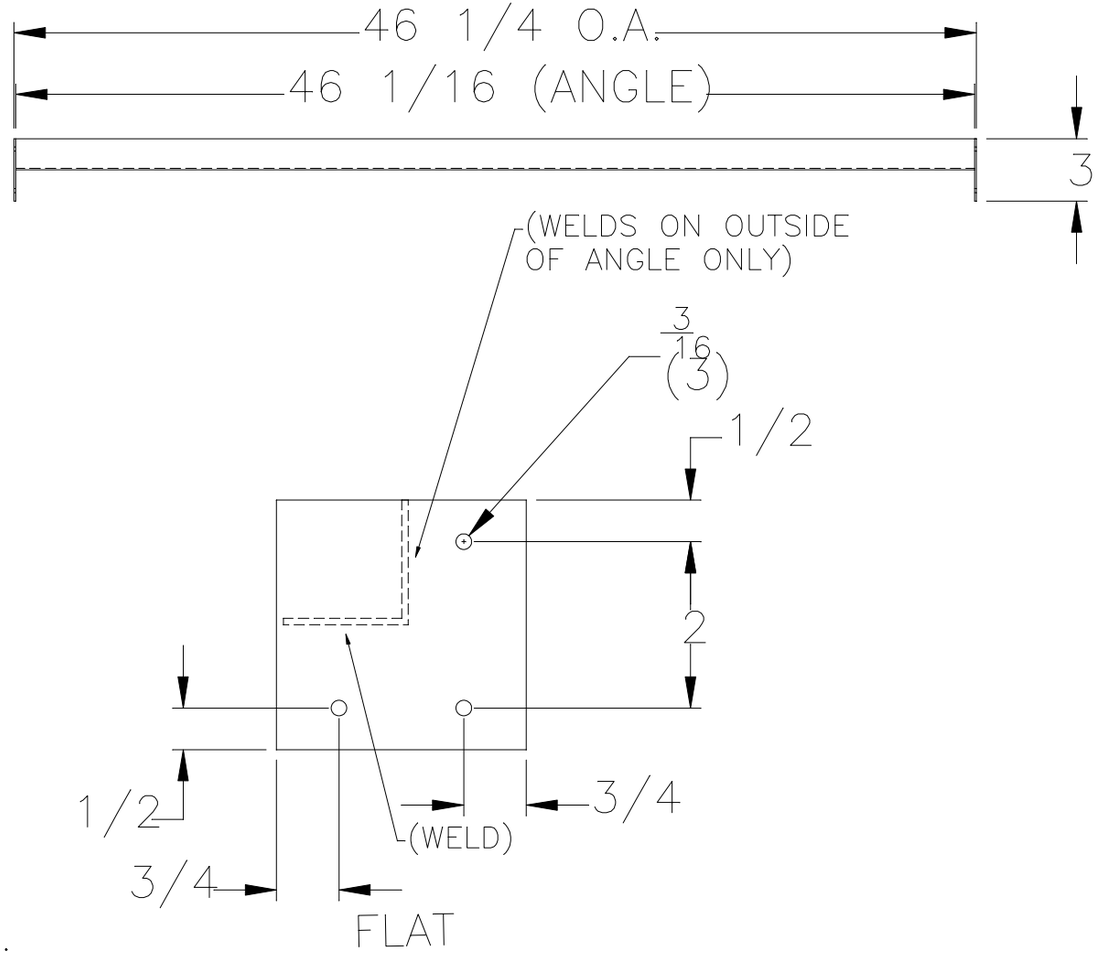


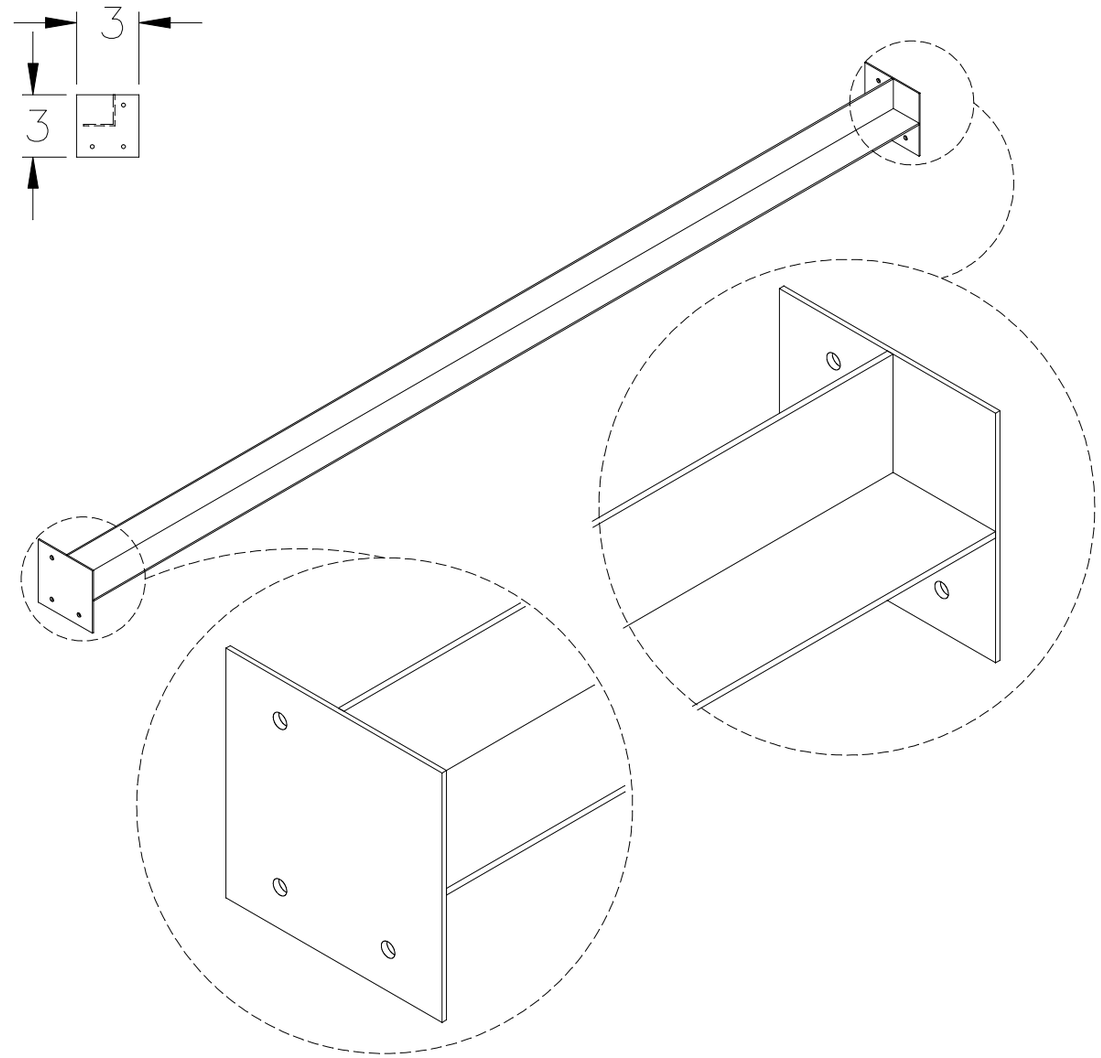


MATERIAL:

1 1/2" X 1 1/2" X 11 GA STEEL; PAINTED BLACK

14 GA FLAT; PAINTED BLACK

| | | | | | |
|---|---|---|---|---|---|
| NEWMAR CORP<br>P.O. Box 30,<br>Nappanee, IN. 46550 | Model: SSCC/SACC | Sheet 2 OF 5 | Drawn by: H. Y. | Checked by: E. C. | Revision: NEW 2021 DRAWING 5 PAGES ILO 3 PAGES,ADDED NEW MODEL PAGE 3. By: H. Y. |
| | | | | | NEW PARTS PAGE 4&5,2021 (PCR # 210763) Date:EC 3/17/20 |
| UNITS: INCHES | Title: BRACKET FRESH WATER TANK | I.D. # 2021\CC\FRAME\PARTS\BRACKET_FRESH_WATER_TANK | Date: 3/16/20 | Date: 3/17/20 | Revision: By: |
| TITLE BLOCK: 1TB | | | | | Date: |