ITEM #	QTY	NEWMAR #	DESCRIPTION
1	1	150145	.0747" (14 GA.) x 13.575" x 33.688" BENT ANGLE

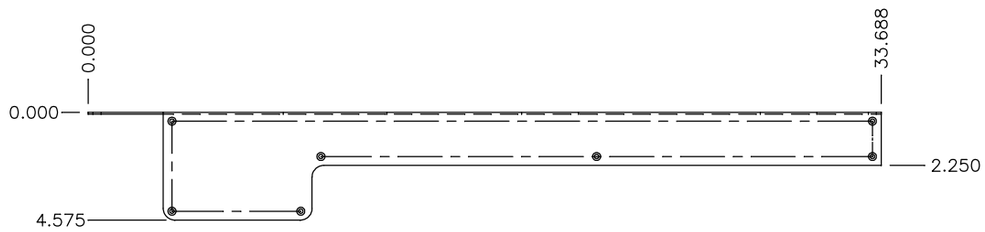

BENT SIDE VIEW

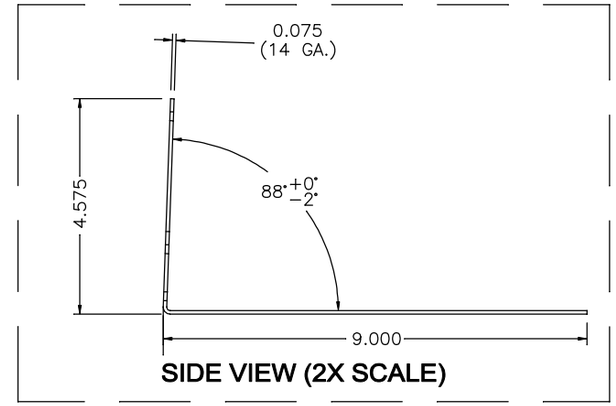

SIDE VIEW (2X SCALE)

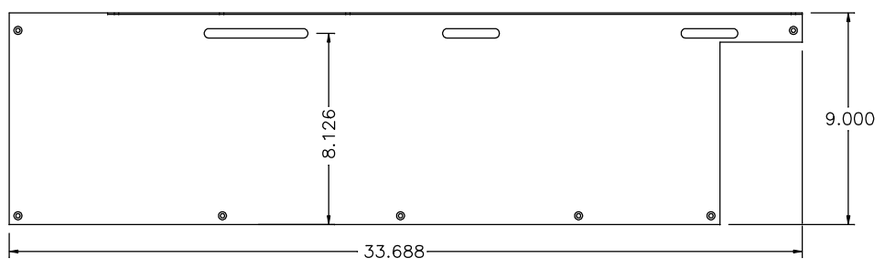

BENT BOTTOM VIEW

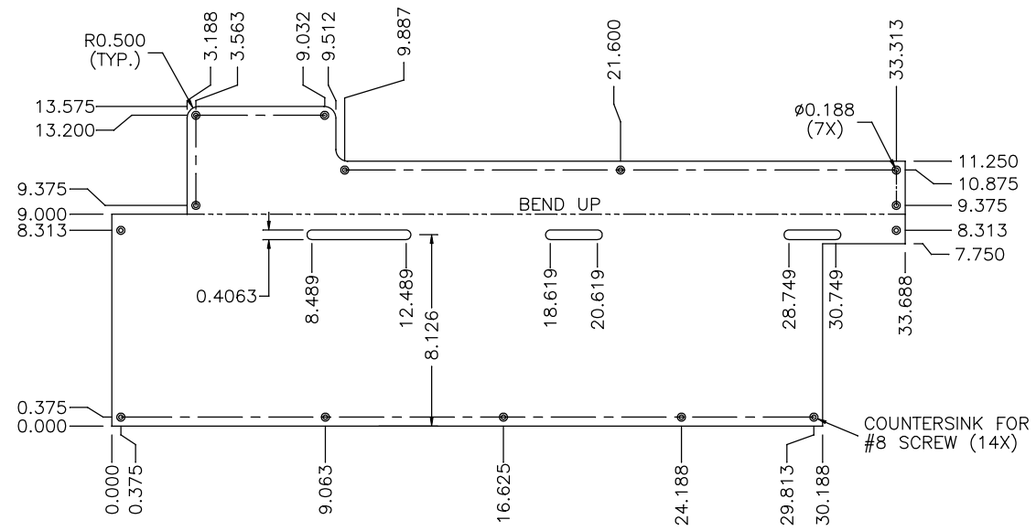

FLAT VIEW

NOTES:
1. FINISH: POWDER COAT BLACK

NEWMAR CORP *P.O. Box 30,* *Nappanee, IN. 46550*	Model: SEE INDEX	Sheet 1 OF 1	Drawn by: B. S.	Checked by: B. S.	Revision: MODIFIED BENT SECTION WERE PUCK RIDES ON AND ADJUSTED HOLE SPACING.	By: B. S.
						Date: 9/29/21
UNITS: INCHES	Title: TRIM, BOTTOM, S-0 ENDWALL FIBERGLASS-24"-LH	I.D. # SLIDE OUT\PARTS\ TRIM_150145	Date: 8/6/19	Date: 8/6/19	Revision:	By:
TITLE BLOCK: 1TB						Date: