ITEM #	QTY	NEWMAR #	DESCRIPTION
1	1	150510	EXTERIOR SHOWER KIT

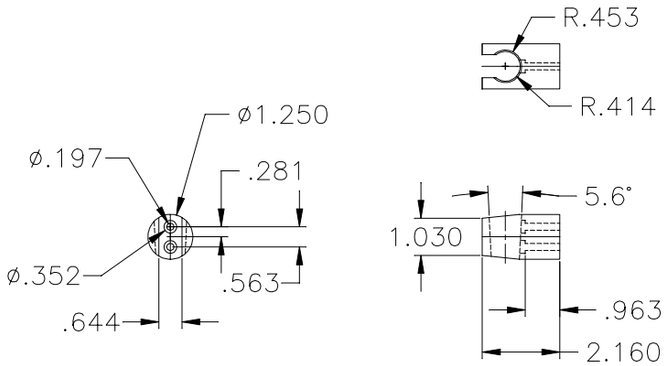

HANDSET HOLDER

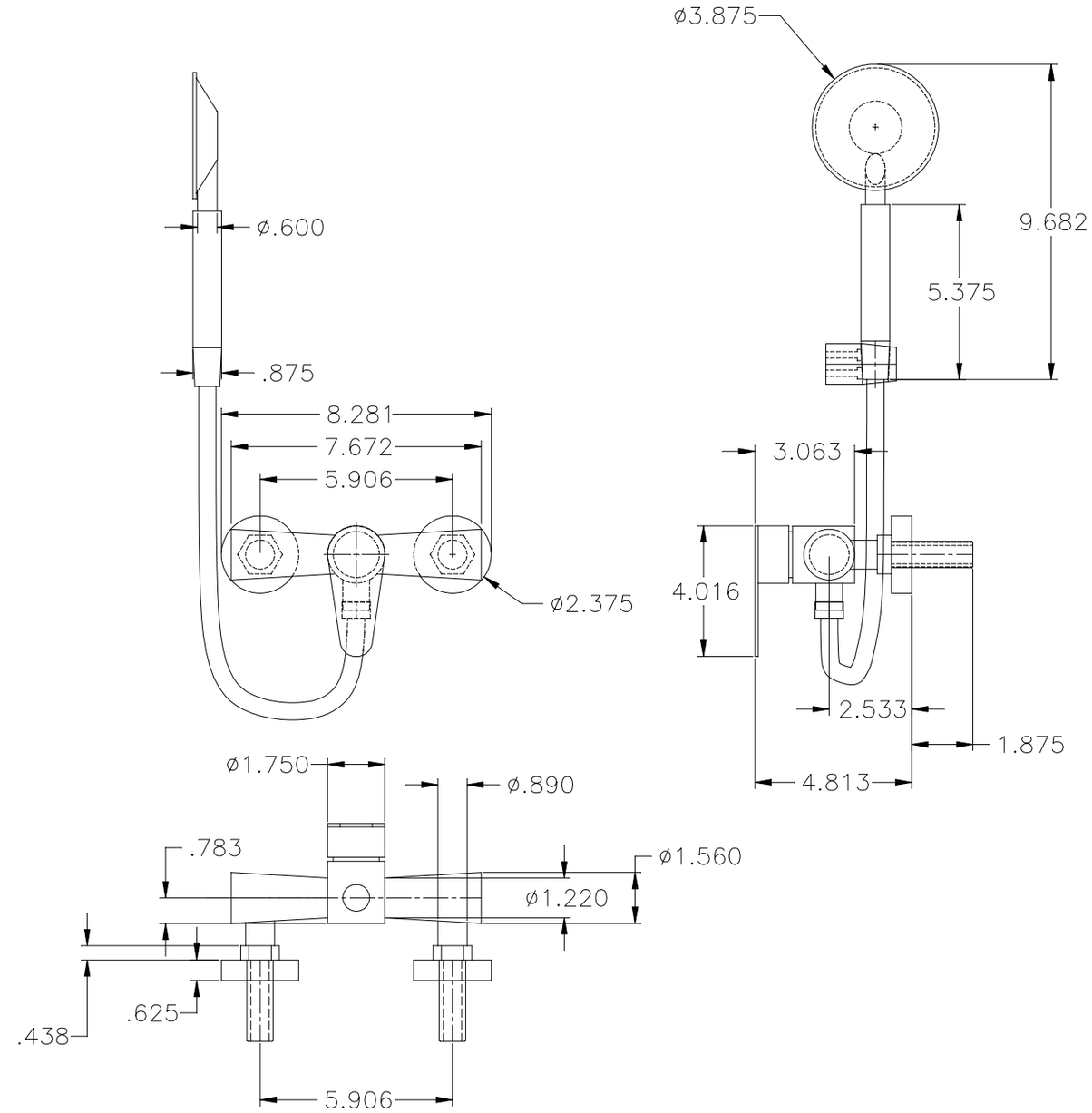

NEWMAR CORP P.O. Box 30, Nappanee, IN. 46550	Model: SEE INDEX	Sheet 1 OF 1	Drawn by: G. Y.	Checked by:	Revision:	By:
						Date:
UNITS: INCHES	Title: EXTERIOR SHOWER HEAD	I.D. # 2021\BLOCKS\PLUMBING\SHOWERS_FAUCETS\150510	Date: 8/14/19	Date:	Revision:	By:
TITLE BLOCK: 1TB						Date: