ITEM #	QTY	NEWMAR #	DESCRIPTION	
1	1	150671	TANK HOLDING MOT 55GAL 17.5X78	– ROCHESTER
2	1	150672	TANK HOLDING MOT 75GAL 23.5X78	– ROCHESTER
3	1	150673	TANK HOLDING MOT 55GAL 17.5X78	– AMERI–KART
4	1	150674	TANK HOLDING MOT 75GAL 23.5X78	– AMERI–KART

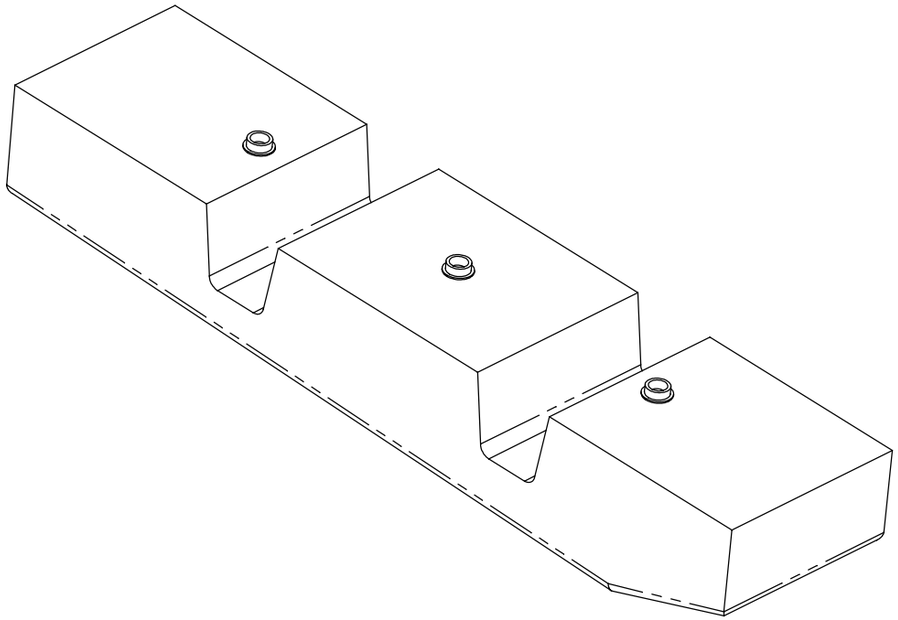

BLACK TANK (55 GAL.)

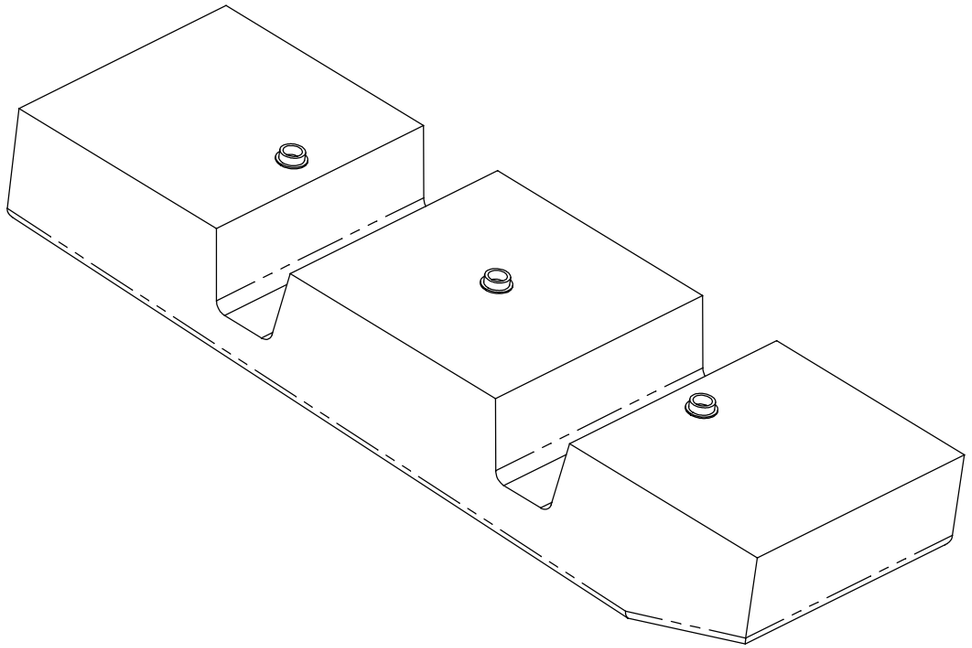

GREY TANK (75 GAL.)

NEWMAR CORP P.O. Box 30, Nappanee, IN. 46550	Model: (SEE INDEX)	Sheet 1 OF 3	Drawn by: V. K.	Checked by: B. B.	Revision: CORRECTED VENDORS DESCRIPTIONS. (PCR #210027)	By: V. K.
						Date:BB 10/7/19
UNITS: INCHES	Title: BLACK AND GREY HOLDING TANK	I.D. # 2021\COMPONENTS\MISC5012	Date: 8/21/19	Date: 9/30/19	Revision:	By:
TITLE BLOCK: 1TB						Date: