CUT PATTERN	
BACK FRAME NO.	
BASE FRAME NO.	
WOOD PATTERN	

= MAIN
= ACCENT

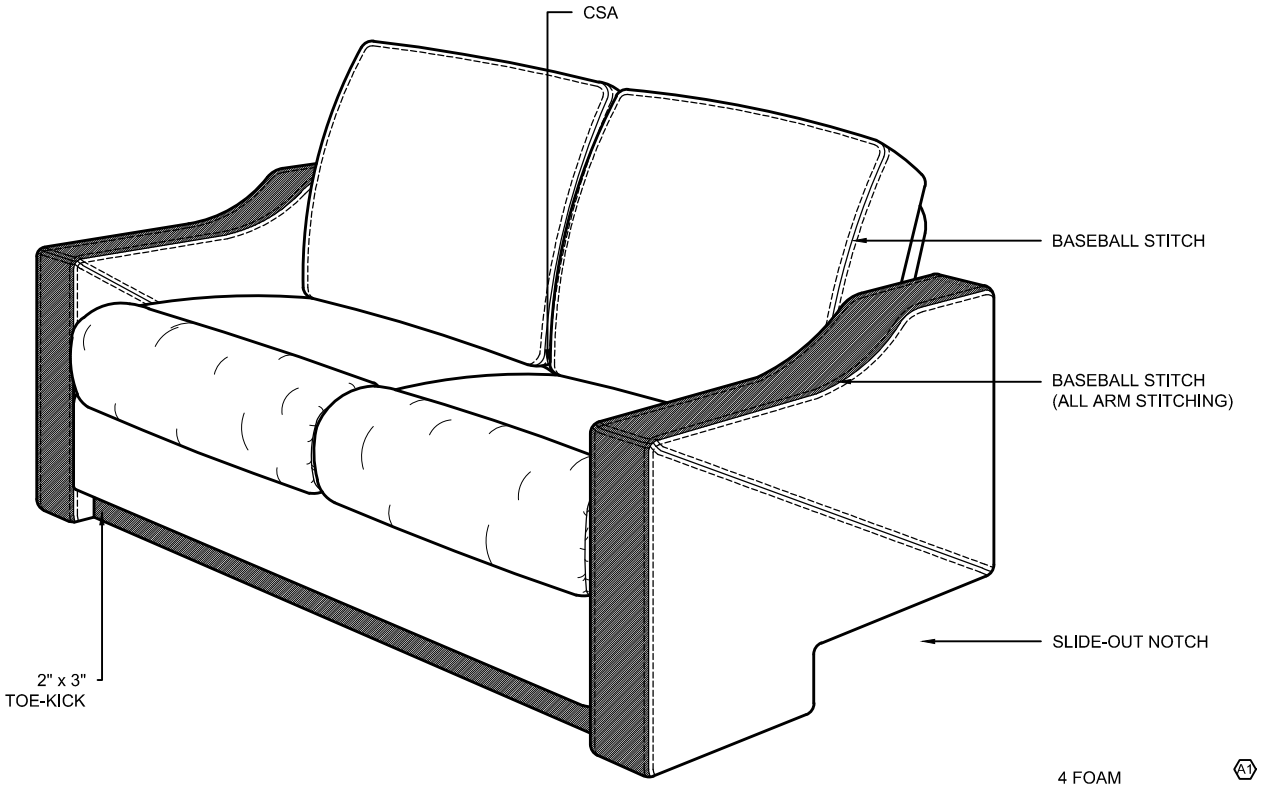

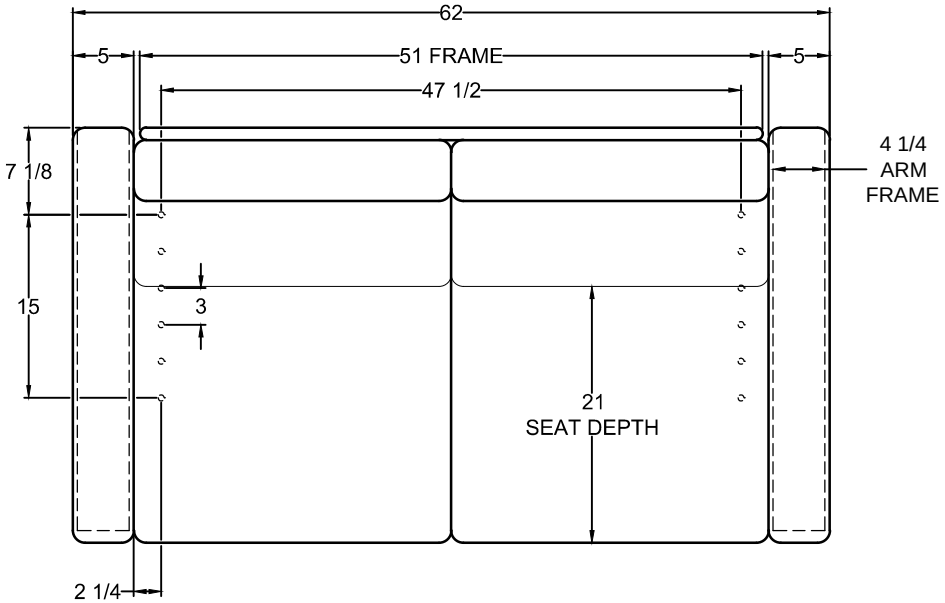

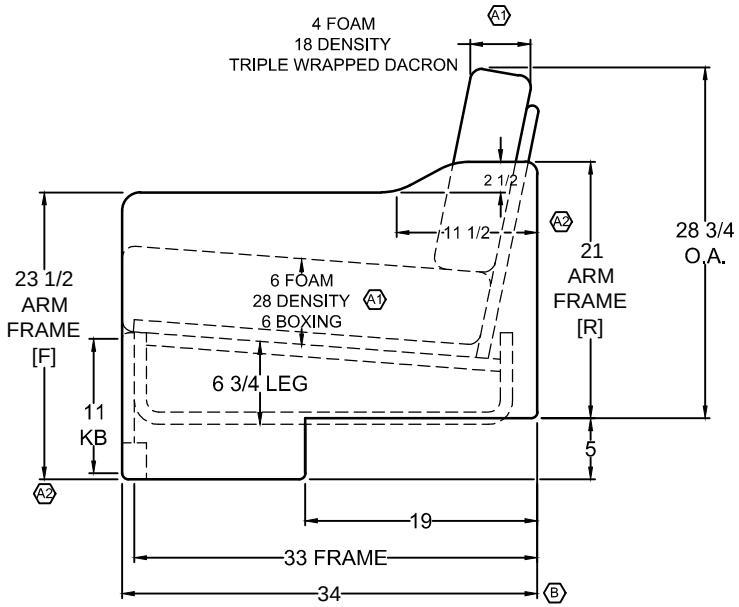

VILLA INTERNATIONAL
13760 Midway St.
Cerritos, CA 90703
Tel 562-404-8111
Fax 562-404-7781

TITLE	DWG. NO.	REV.	APV	SCALE 1:1
2019 MOUNTAIN AIRE 62" TV DORMI SOFA	VI2000799	B	FTBM 05.28.19	DO NOT SCALE DRAWING. UNLESS OTHERWISE SPECIFIED DIMENSIONS ARE IN INCHES.
	DR J.ANCHETA	DATE 01.04.19		

THIS DRAWING IS THE PROPERTY OF VILLA INTERNATIONAL MFG. ALL RIGHTS RESERVED.

JA	B	PER FTBM, CHANGE DEPTH TO 34"; WAS 34-1/2".	05.28.19
JA	A	PRODUCTION UPDATE: [1] ADJUST SEAT & BACK CUSHION DETAILS. [2] ADD ARM FRAME DETAILS.	02.14.19

REVISIONS