CUT PATTERN	
BACK FRAME NO.	
BASE FRAME NO.	
WOOD PATTERN	

= MAIN
= ACCENT

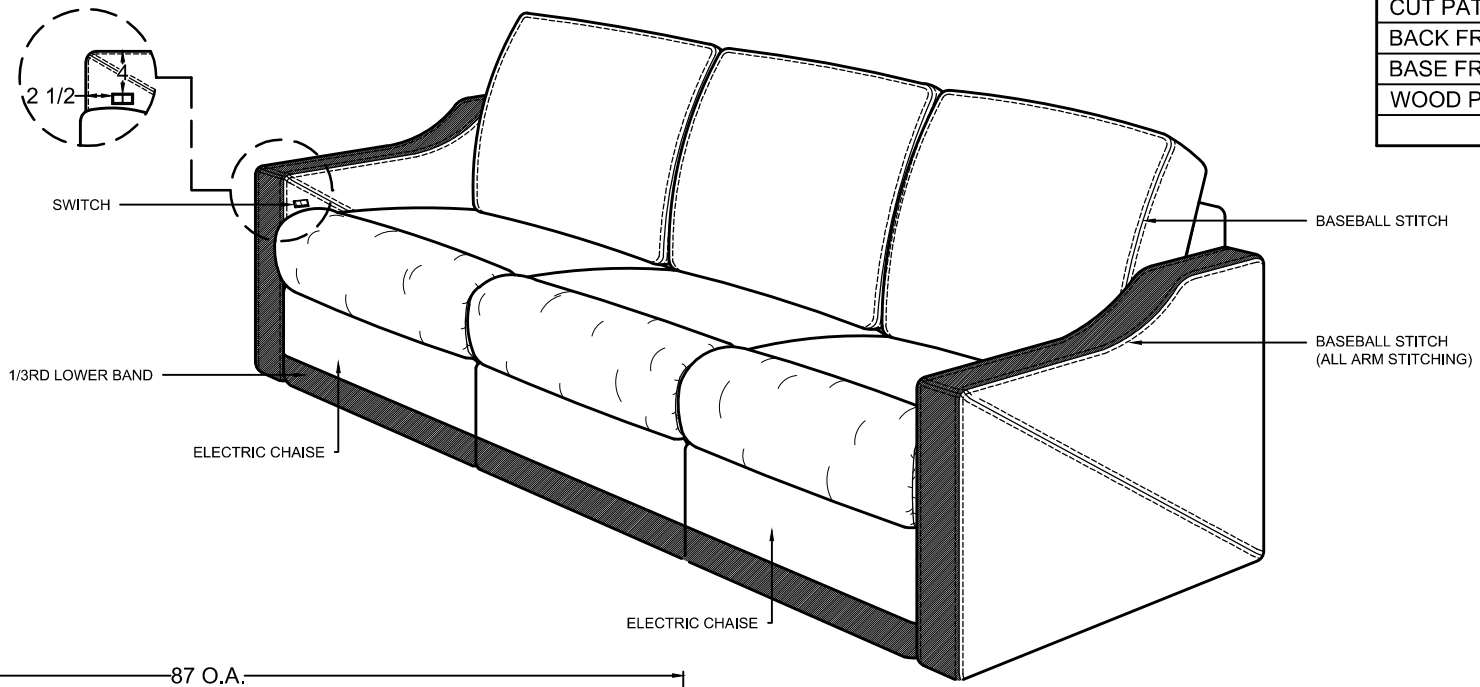

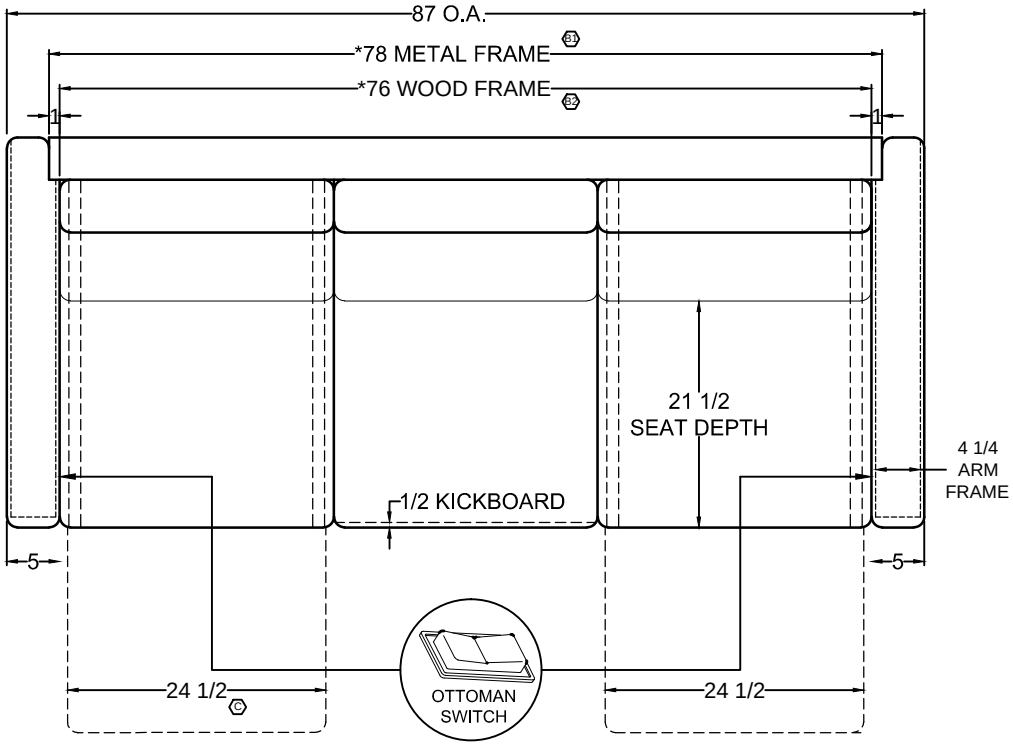

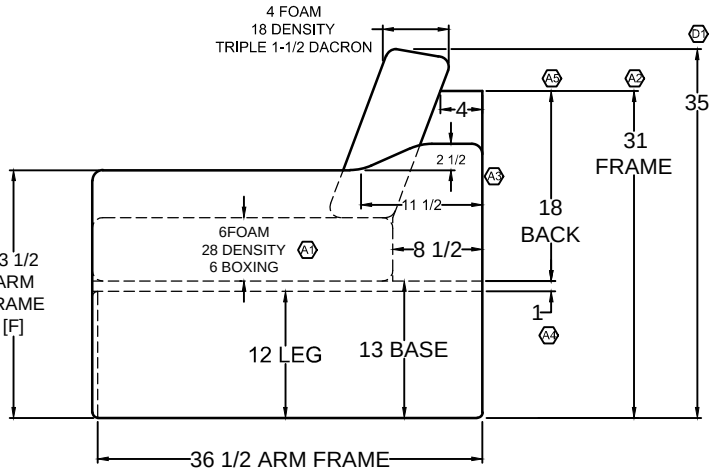

JA	D	PER RL, [1] ADD 35" O.A. HEIGHT DIMENSION TO DRAWING. [2] DELETE 26" BACK OF ARM FRAME HEIGHT DIMENSION FROM DRAWING.	10.03.19
LB	C	PRODUCTION UPDATE: CHANGED THE WIDTH OF ELECTRIC CHAISE TO 24 1/2"; WAS 26".	05.30.19
LB	B	PER RL: [1] CHANGED LENGTH OF METAL FRAME TO 78"; WAS 79. [2] INSERTED WOOD FRAME DIMENSION. [3] CHANGED WIDTH OF WOOD FRAME TO 24 1/4"; WAS 22 3/4". [4] CHANGED WIDTH OF WOOD BOX TO 22"; WAS 22 1/4".	05.23.19
JA	A	PRODUCTION UPDATE: [1] ADJUST SEAT CUSHION DETAILS. [2] CHANGE FRAME HEIGHT TO 31" WAS 30". [3] ADD ARM FRAME DETAILS. [4] ADD 1" ON TOP OF LEG FOR BASE. [5] ADD 18" BACK HEIGHT DIMENSION.	02.14.19

REVISIONS

VILLA INTERNATIONAL
13760 Midway St.
Cerritos, CA 90703
Tel 562-404-8111
Fax 562-404-7781

TITLE
2019 MOUNTAIN AIRE
87" NON-SLEEPER SOFA
W/ DUAL POWER CHAISE

DWG. NO. VI4000667
REV. D
DR J.ANCHETA
DATE 01.07.19
APV FTBM 05.02.19
SCALE 1:1
DO NOT SCALE DRAWING.
UNLESS OTHERWISE SPECIFIED DIMENSIONS ARE IN INCHES.

THIS DRAWING IS THE PROPERTY OF VILLA INTERNATIONAL MFG. ALL RIGHTS RESERVED.