| | |
|---|---|
| CUT PATTERN | |
| BACK FRAME NO. | |
| BASE FRAME NO. | |
| WOOD PATTERN | |
| | |

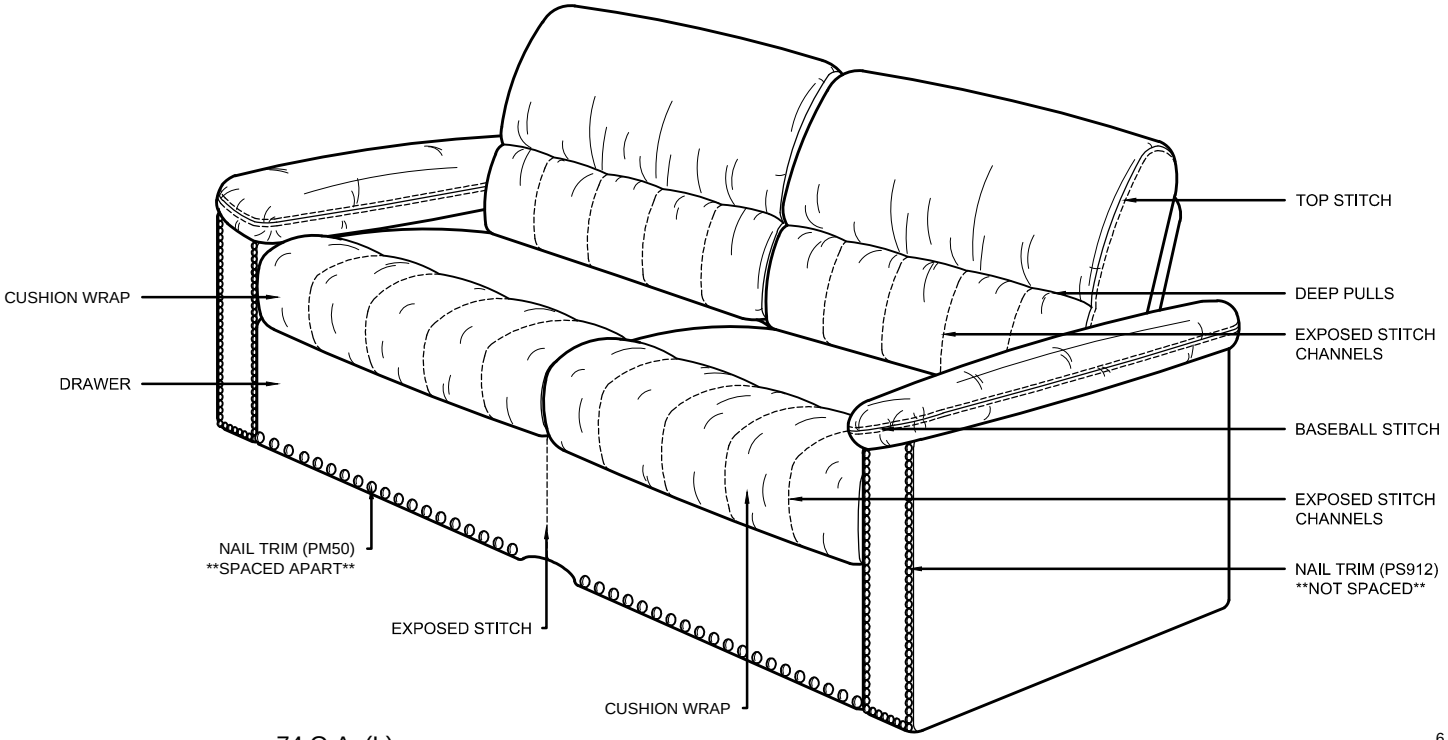


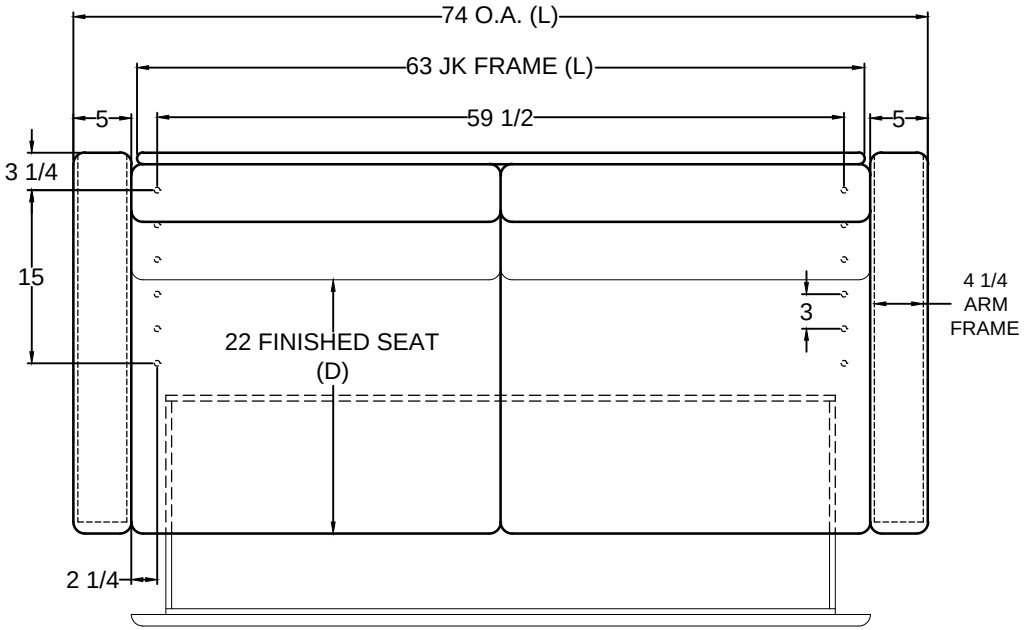


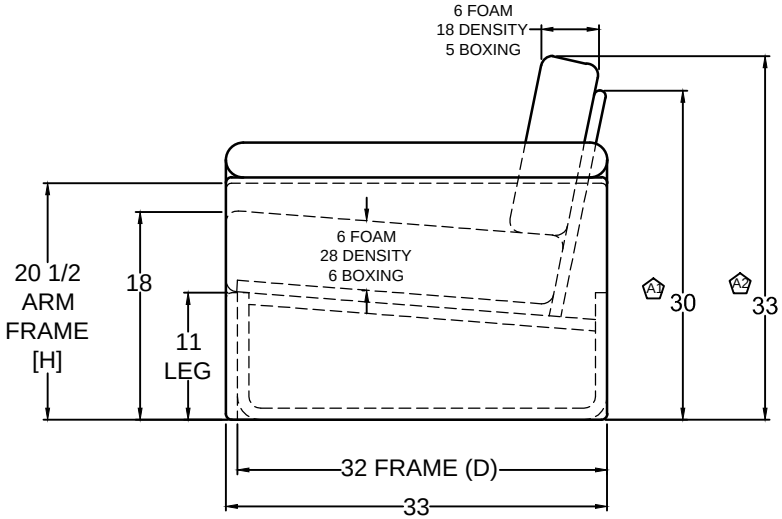



VILLA INTERNATIONAL
13760 Midway St.
Cerritos, CA 90703
Tel 562-404-8111
Fax 562-404-7781


| TITLE | DWG. NO. | REV. | APV | SCALE 1:1 |
|---|---|---|---|---|
| 2019 LADP<br>CSA - 74" JACK KNIFE SOFA | VI2000761 | A | FTBM<br>10.25.18 | DO NOT SCALE DRAWING.<br>UNLESS OTHERWISE SPECIFIED DIMENSIONS ARE IN INCHES. |
| | DR J.ANCHETA | DATE 10.24.18 | | |

THIS DRAWING IS THE PROPERTY OF VILLA INTERNATIONAL MFG. ALL RIGHTS RESERVED.

| | | | |
|---|---|---|---|
| FP | A | PER RL: [1] CHANGED FRAME HEIGHT TO 30" WAS 28 1/2"; [2] ADDED 33" O.A. HEIGHT DIMENSION. | 12.28.18 |

REVISIONS