CUT PATTERN	
BACK FRAME NO.	
BASE FRAME NO.	
WOOD PATTERN	

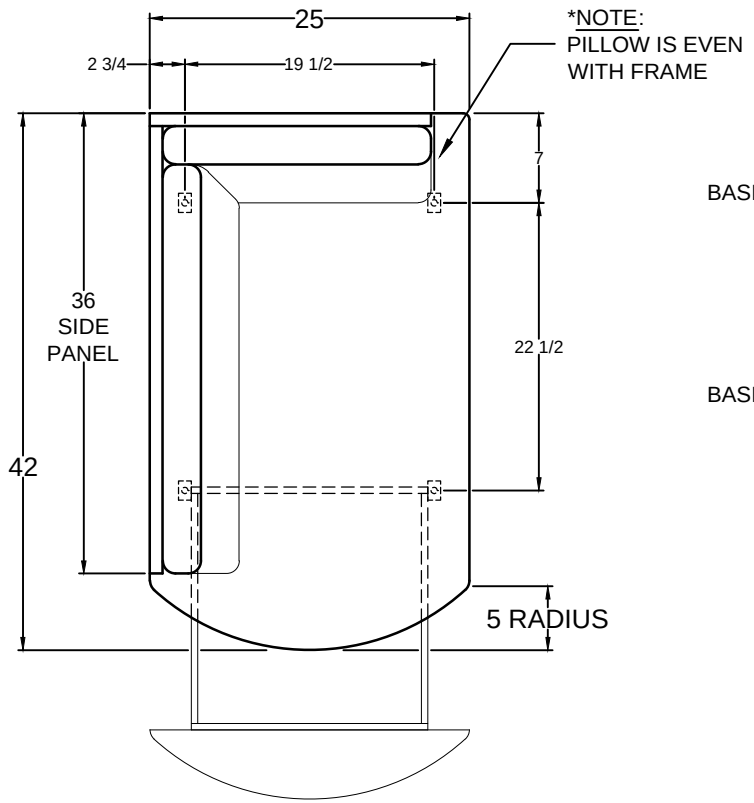

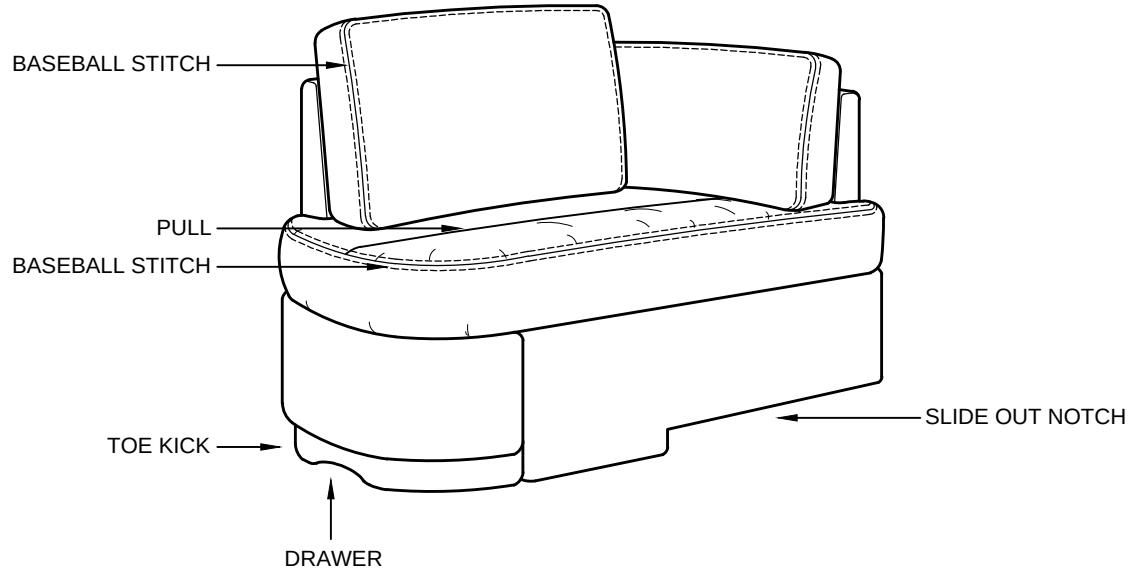

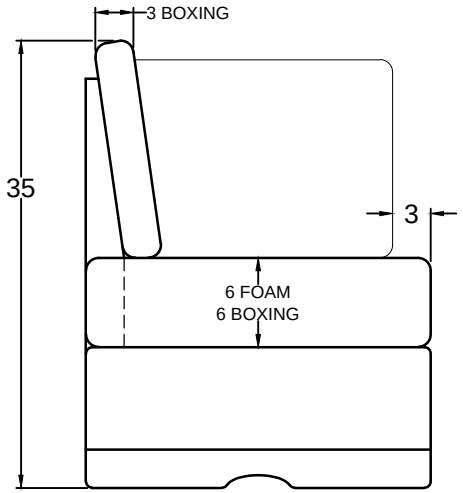

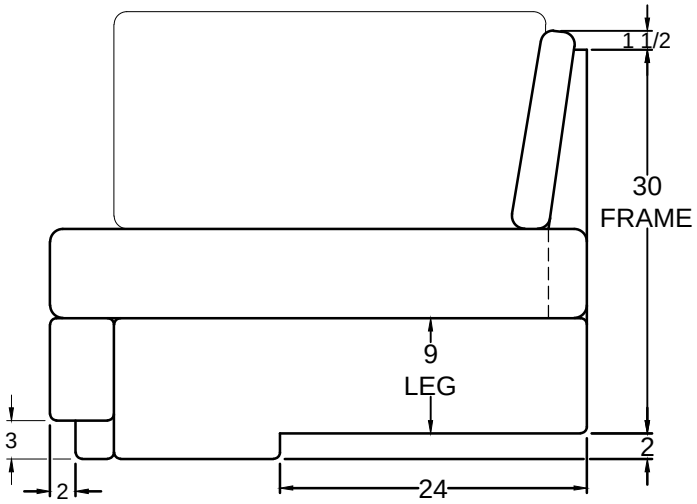

VILLA INTERNATIONAL
13760 Midway St.
Cerritos, CA 90703
Tel 562-404-8111
Fax 562-404-7781

TITLE: 2019 MOUNTAIN AIRE 42" x 25" LAF DINETTE BENCH	DWG. NO. VI3000735	REV. -	APV FTBM 08.05.2020	SCALE 1:1 DO NOT SCALE DRAWING. UNLESS OTHERWISE SPECIFIED DIMENSIONS ARE IN INCHES.
	DR J.ANCHETA	DATE 08.04.2020		

THIS DRAWING IS THE PROPERTY OF VILLA INTERNATIONAL MFG. ALL RIGHTS RESERVED.

--	-	

REVISIONS