ITEM #	QTY	NEWMAR #	DESCRIPTION
1	1	152169	TRIM FIREPLACE KIT MPL 4 SIDED

FOUR-SIDED FIREPLACE TRIM TO BE USED IN ALL COACHES. IF FOUR-SIDED TRIM DOES NOT FIT, THREE-SIDED TRIM MAY BE USED.

TOP VIEW

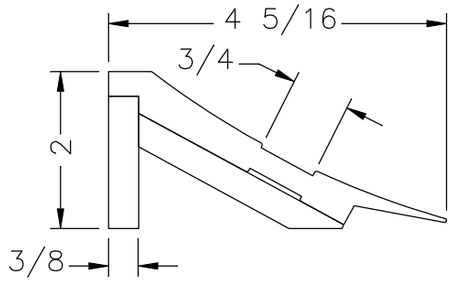

SECTION A–A
SCALE: 4x

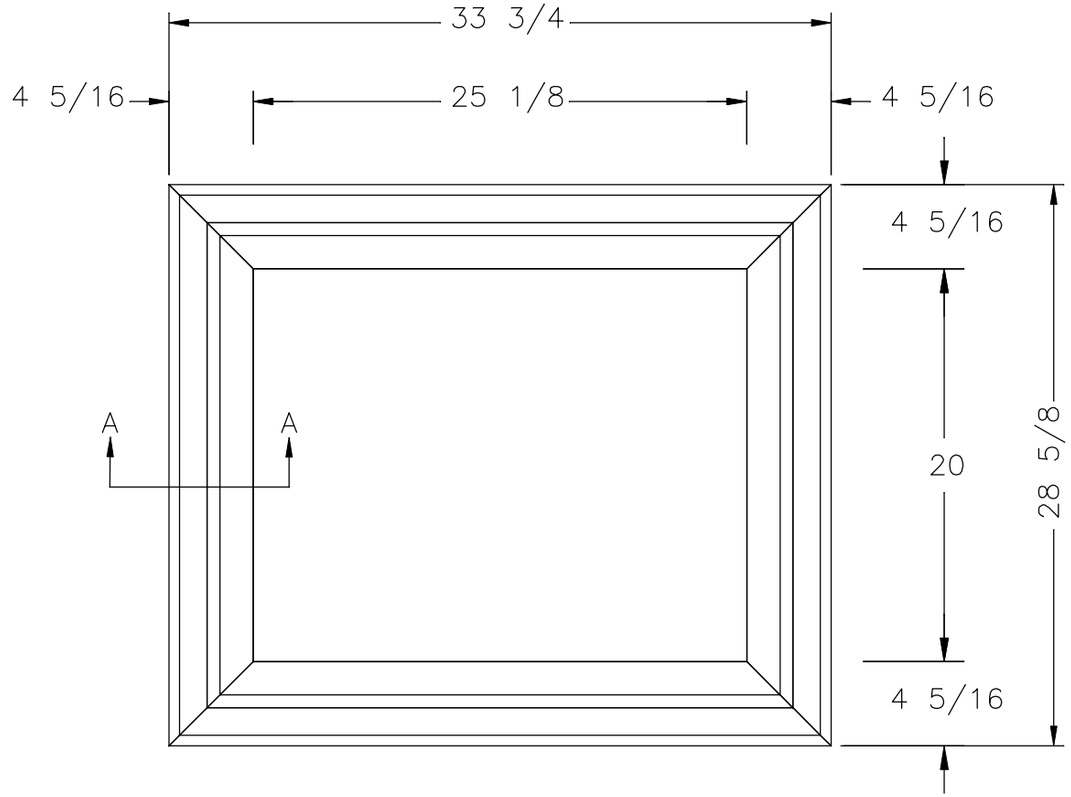

FRONT VIEW

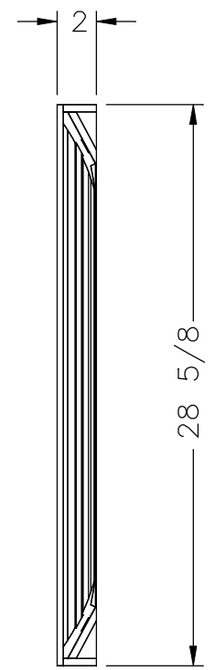

SIDE VIEW

NEWMAR CORP P.O. Box 30, Nappanee, IN. 46550	Model: (J330)(J070) CSFD, VTDP, DSDP	Sheet 1 OF 2	Drawn by: V. K.	Checked by: R. R.	Revision:	By:
						Date:
UNITS: INCHES	Title: FIREPLACE TRIM KIT	I.D. # 2022\CA\CAB\LR\FIRE_PLACE_TRIM_KIT	Date: 1/13/21	Date: 1/22/21	Revision:	By:
TITLE BLOCK: 1–4FULTB						Date: