ITEM #	QTY	NEWMAR #	DESCRIPTION
1	1	74757	14 GA. (.0747") x 1 1/2" x 2 1/2" x 144" STEEL TUBE
2	1	–	3/16" x 1 1/2" x 2 1/2" FORMED ANGLE

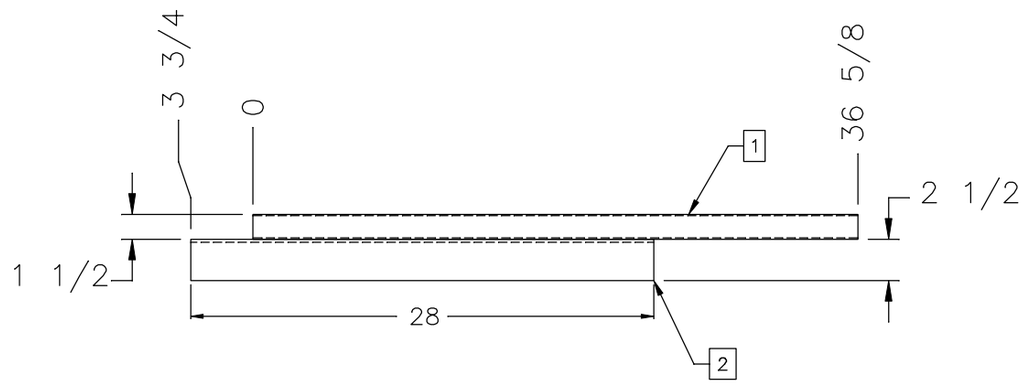

TOP VIEW

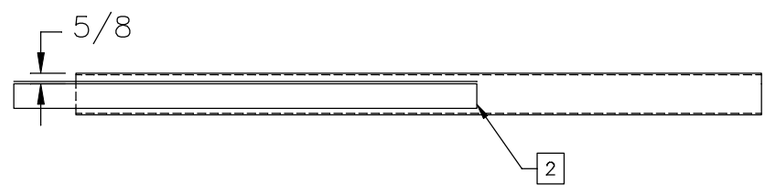

FRONT VIEW

NOTES:
1. NEWMAR PART #152211

NEWMAR CORP *P.O. Box 30,* *Nappanee, IN. 46550*	Model: SEE INDEX	Sheet 1 OF 1	Drawn by: B. S.	Checked by: B. S.	Revision: MOVED THE ANGLES BACK TO 5/8" DOWN INSTEAD OF 3/8". PER ECO #582 — By: B. S. — Date: 9/15/20
UNITS: INCHES TITLE BLOCK: 1TB	Title: SLIDE OUT FLOOR SUPPORT - END 5/8" DROP	I.D. # SLIDE OUT\HWH\FLR_SUP_BRKT\HORZ\ BRKT_152211	Date: 10/17/19	Date: 1/8/20	Revision: SHORTEN ANGLE LENGTH TO STANDARDIZE SIZES. — By: B. S. — Date: 5/13/20