ITEM #	QTY	NEWMAR #	DESCRIPTION
1	1	152615	BRKT FRT CAMERA 360 SS
2	1	153258	BRKT FRT CAMERA 360 SS-B

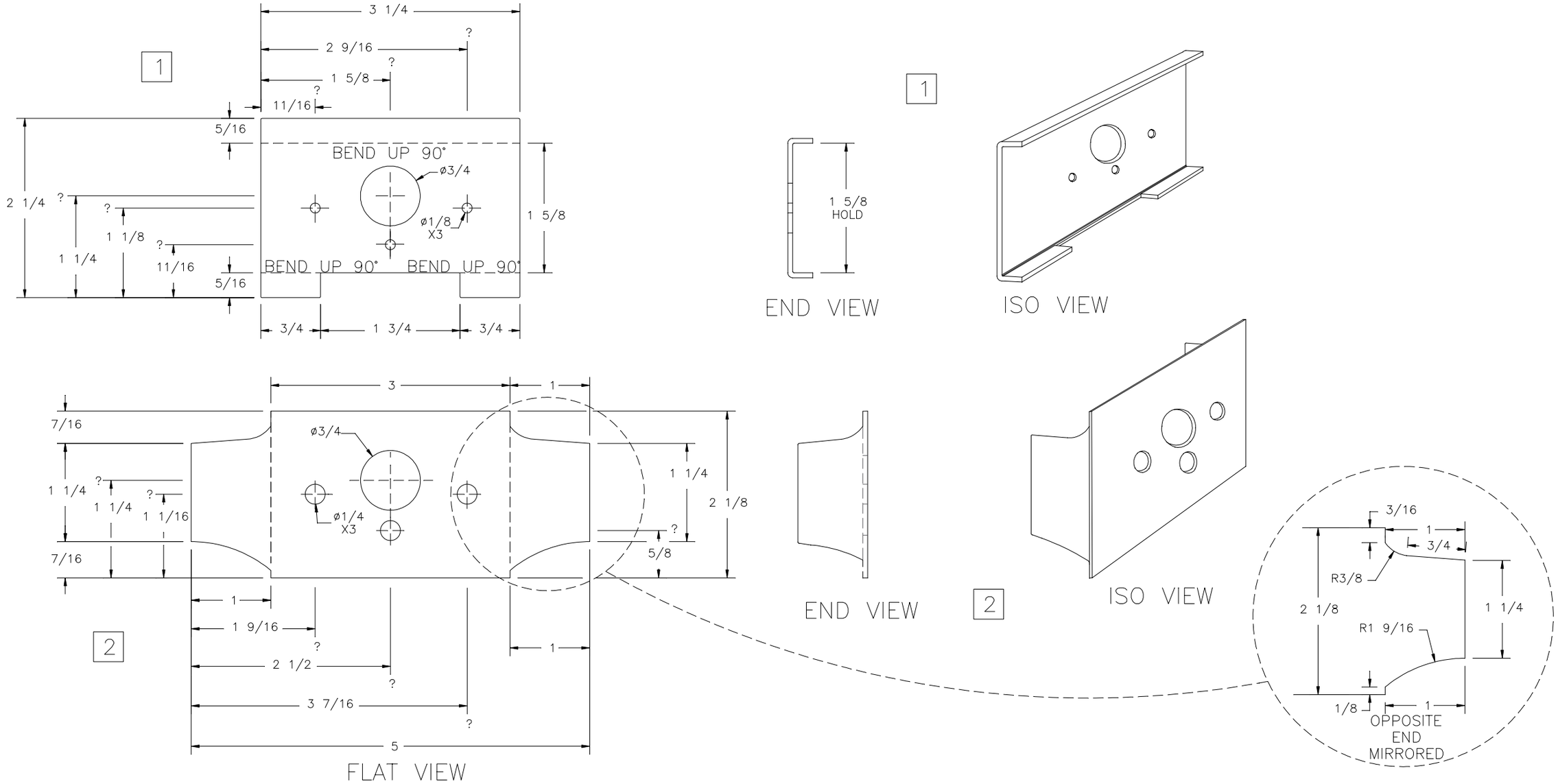

NEWMAR CORP P.O. Box 30, Nappanee, IN. 46550	Model: SSCC (SEE INDEX) (J270)	Sheet 1 OF 1	Drawn by: H. Y.	Checked by: E. C.	Revision: New 2021 print; Created print for front 360 degree camera bracket	By: R. W.
						Date: EC 2/26/20
UNITS: INCHES	Title: BRACKET FRONT 360 CAMERA	I.D. # 2021\CC\FRAME\PARTS\BRACKET_FRONT_360_CAMERA	Date: 2/25/20	Date: 2/26/20	Revision:	By:
TITLE BLOCK: 1-4FULTB						Date: