ITEM #	QTY	NEWMAR #	DESCRIPTION
1	1	152790	BEARING ROLLER CHANNEL 32" W/NOTCH-RH

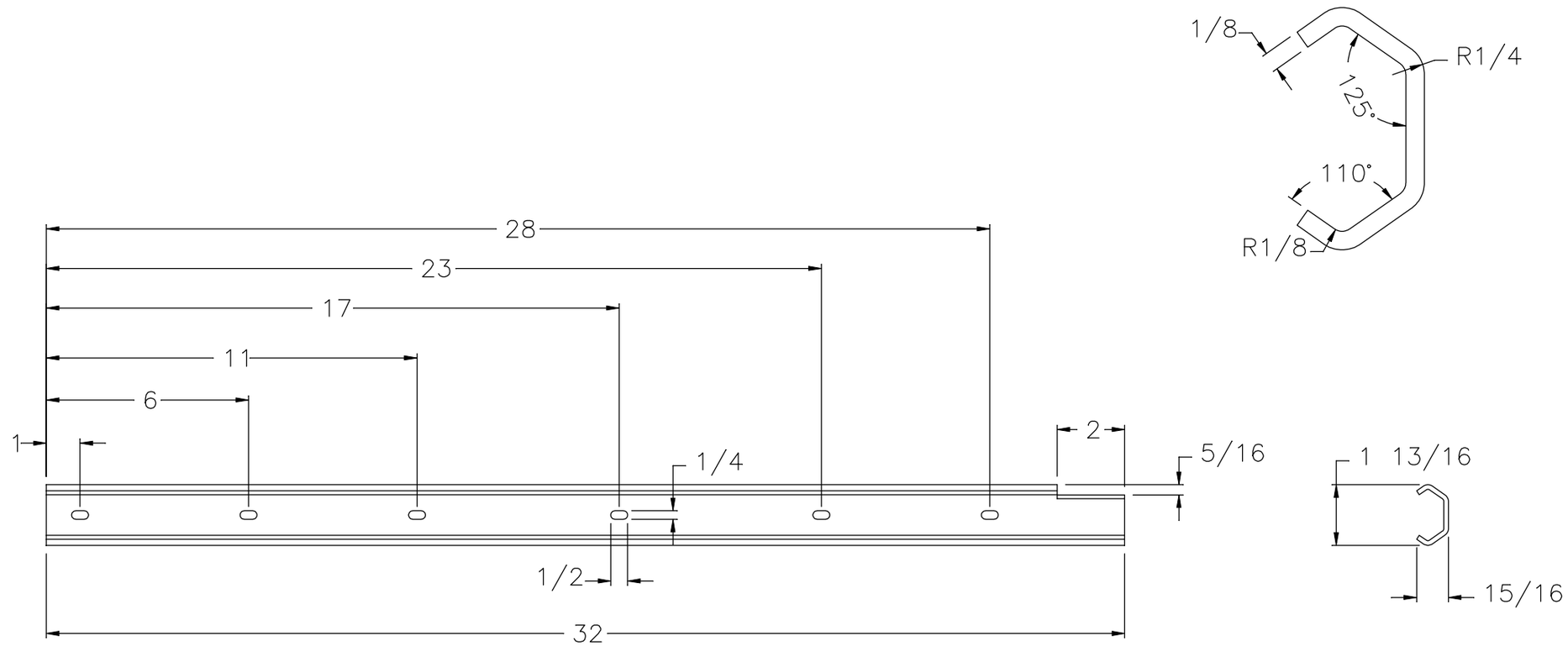

NEWMAR CORP P.O. Box 30, Nappanee, IN. 46550	Model: (SEE INDEX)	Sheet 1 OF 1	Drawn by: B. S.	Checked by: B. S.	Revision: REPLACED HOLES WITH SLOTS FOR WELDING.	By: B. S. Date: 2/26/20
UNITS: INCHES TITLE BLOCK: 1TB	Title: BEARING ROLLER CHANNEL-32" RH	I.D. # SLIDE OUT\BED_MECH\CH_152790	Date: 11/21/19	Date: 12/16/19	Revision: ADDED HOLES FOR WELDING.	By: B. S. Date: 12/16/19