ITEM #	QTY	NEWMAR #	DESCRIPTION
1	1	152878	BRKT HDLT RH 1,2,3,5 KIT
2	1	152879	BRKT HDLT LH 1,2,4,5 KIT

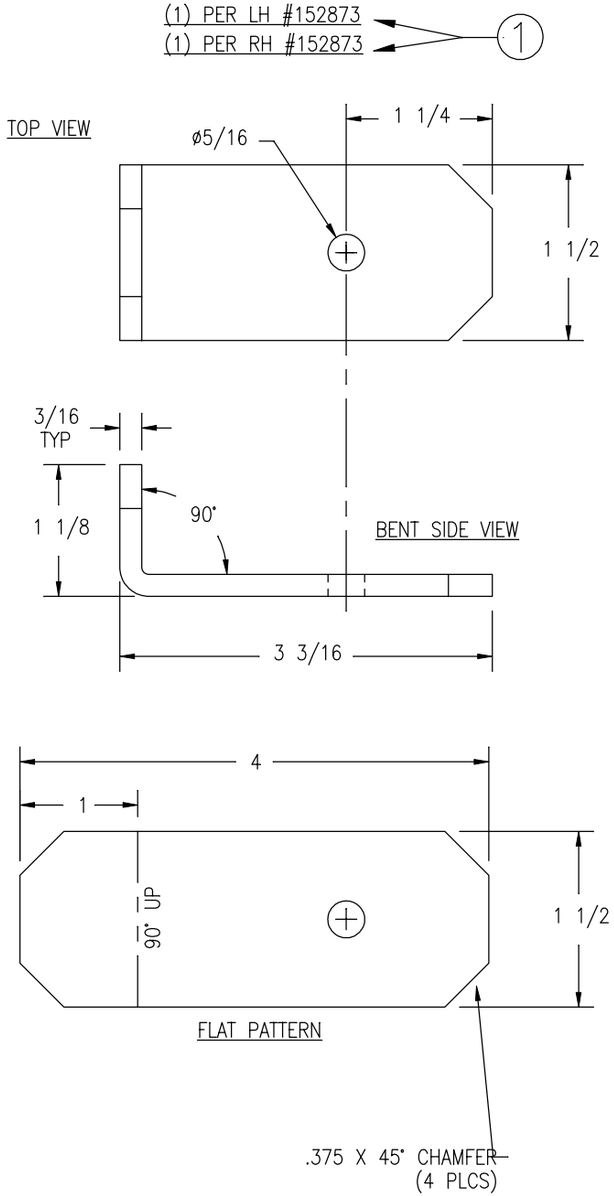

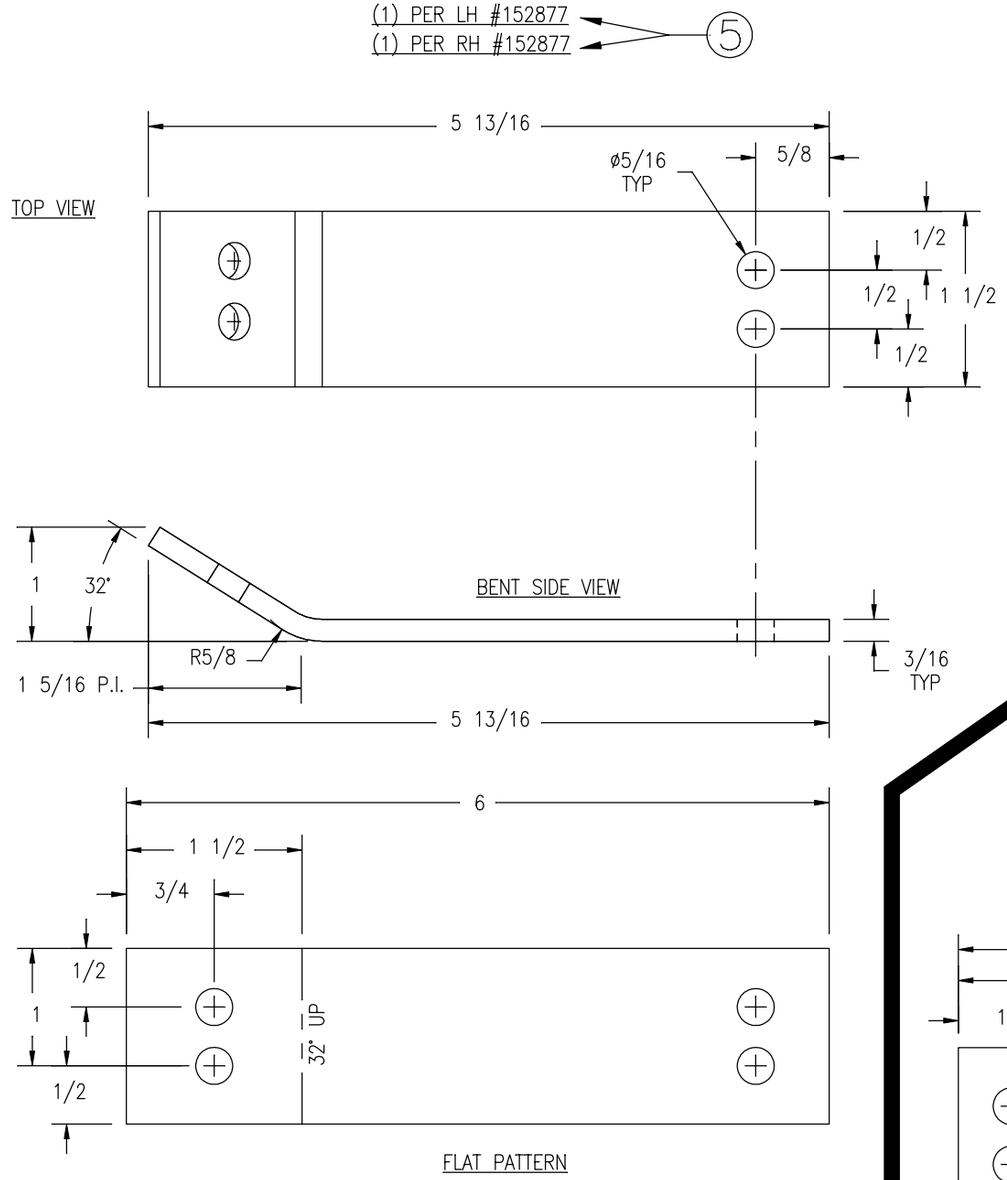

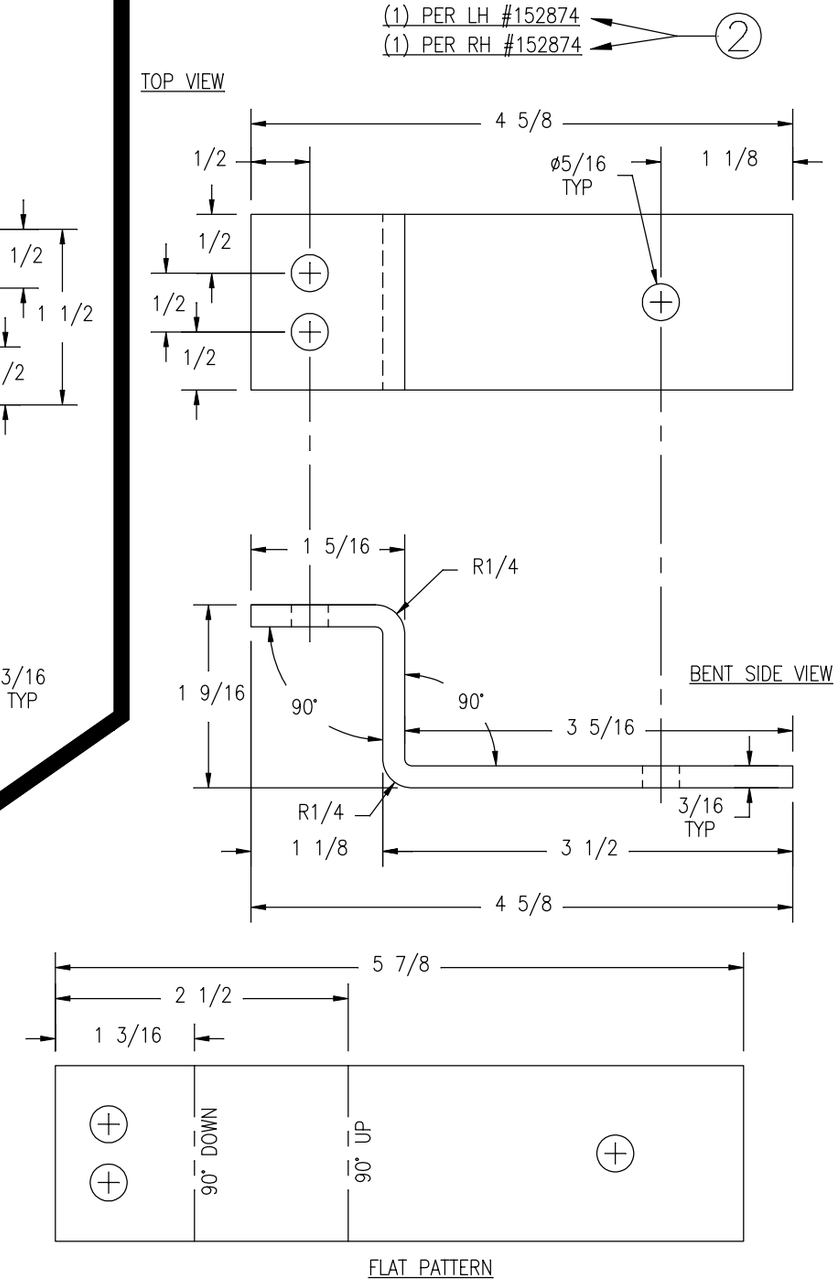

NEWMAR CORP P.O. Box 30, Nappanee, IN. 46550	Model: CSFD	Sheet 1 OF 2	Drawn by: J. H.	Checked by: D. E.	Revision: CHANGED TO "LH" DESCRIPTIONS ILO "DRIVER'S SIDE" & TO "RH" ILO "PASS SIDE"; ADDED LEADERS CALLING OUT KIT CONNECTED TO PART NUMBERS (MCL #5) — By: D. S. — Date: DE 1/13/20
UNITS: INCHES	Title: HEADLIGHT BRACKETS	I.D. # 2021\CA\PROFILE\CS\CSFD_HDLT_BRKTS	Date: 12/6/19	Date: 12/6/19	Revision: — By: — Date:
TITLE BLOCK: 75TB					