ITEM #	QTY	NEWMAR #	DESCRIPTION
1	1	152884	BRKT PLUMBING DRAIN 1-1/2X4-1/4

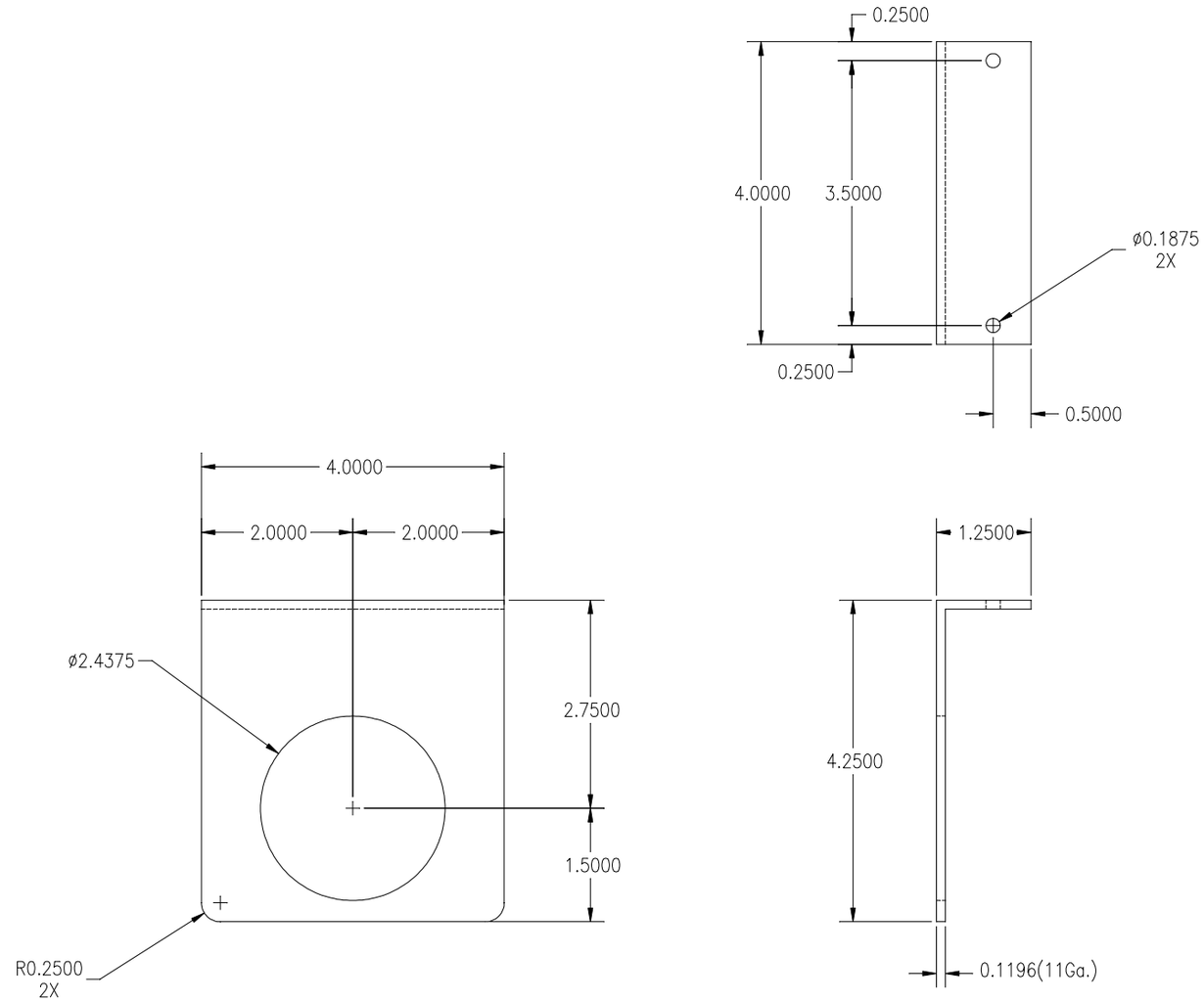

NEWMAR CORP P.O. Box 30, Nappanee, IN. 46550	Model: DP DS 4020	Sheet 1 of 1	Drawn by: V. K.	Checked by: B. B.	Revision: / By: / Date:
UNITS: INCHES	Title: 1 1/2" PLUMBING DRAIN BRACKET	I.D. # 2021\DP\SO\PARTS\MISC5002	Date: 12/3/19	Date: 12/10/19	Revision: / By: / Date:
TITLE BLOCK: 1-2FULTB					