Item #	Qty	Newmar #	Description
1	1	153041	3/4 – 13 FLAT EXPANDED METAL

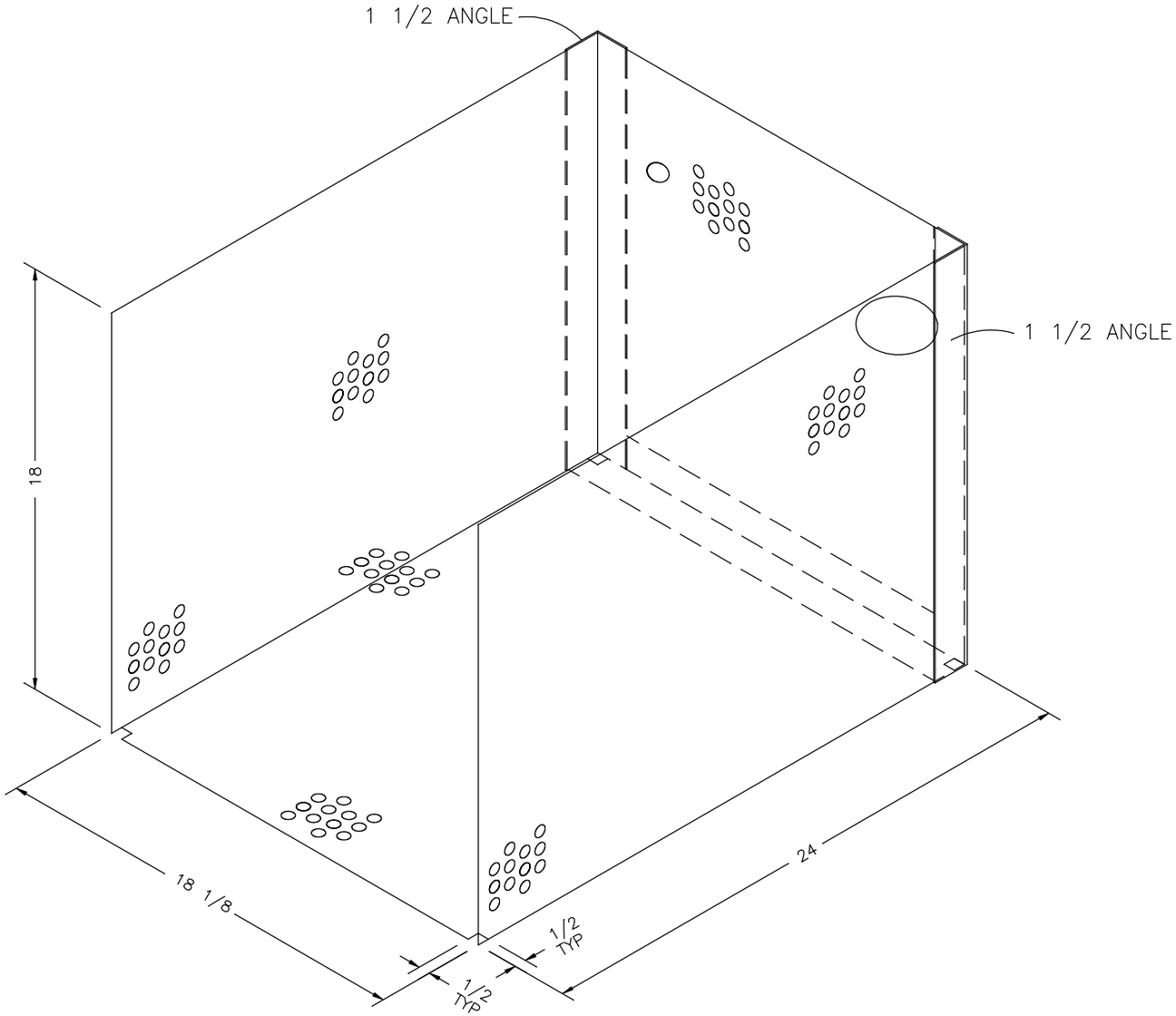

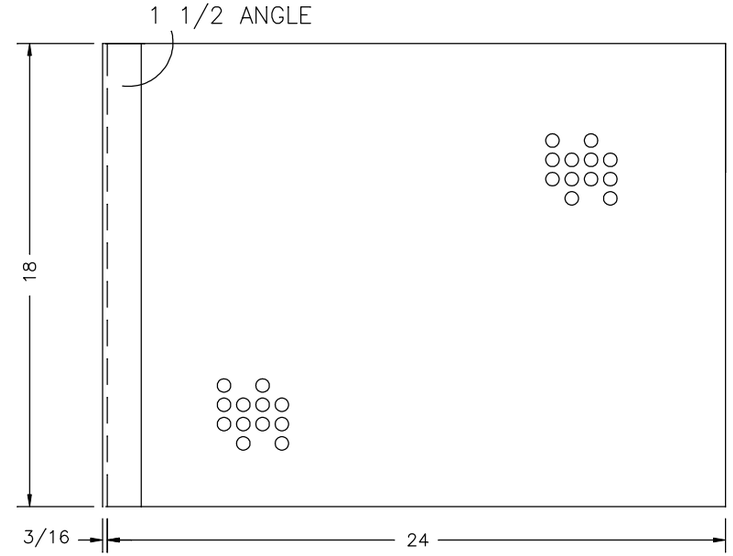

Left Side View w/angle

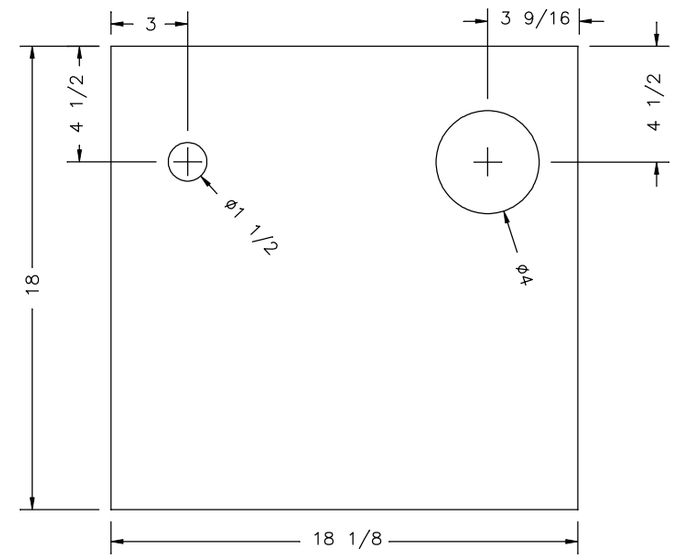

Rear of Box
(looking into box)

NEWMAR CORP *P.O. Box 30,* *Nappanee, IN. 46550*	Model: CS FD 3927	Sheet 1 OF 1	Drawn by: D. S.	Checked by: D. E.	Revision:	By:
						Date:
UNITS: INCHES	Title: AUX FUEL DISPENSER BOX	I.D. # 2021\CA\FRAME\PARTS\MISC5004	Date: 11/27/19	Date: 12/13/19	Revision:	By:
TITLE BLOCK: 1–2FULTB						Date: