ITEM #	QTY	NEWMAR #	DESCRIPTION
1	2	153105	BRKT HEADLIGHT A 21KG 7GA BLK

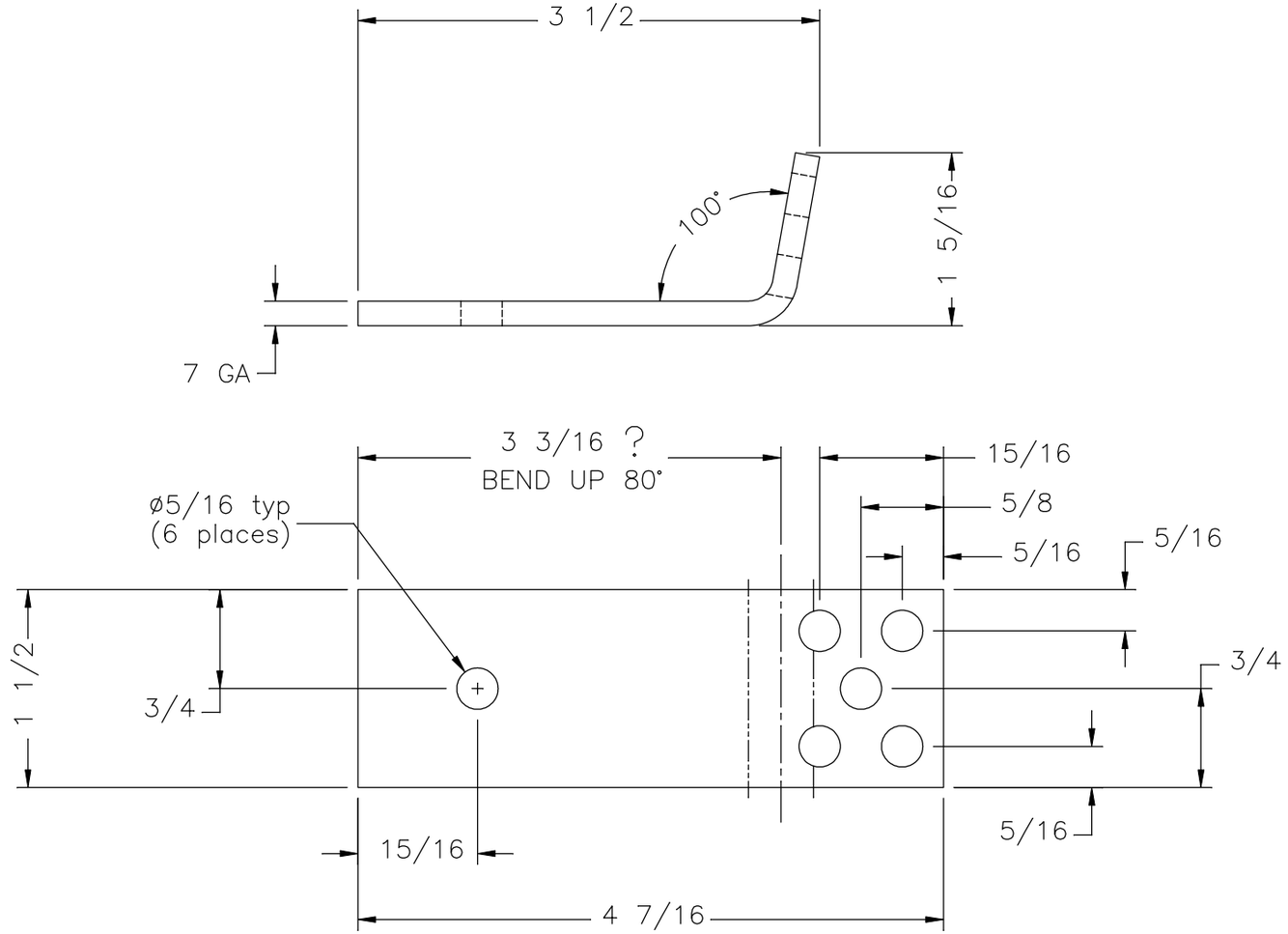

NOTES;

1; MATERIAL: STEEL 7GA

2; FINISH: POWDERCOAT, BLACK

NEWMAR CORP P.O. Box 30, Nappanee, IN. 46550	Model: KGDB	Sheet 1 OF 4	Drawn by: K. B.	Checked by: B. L. G.	Revision: UPDATED ITEM DESCRIPTIONS PAGES 1–3, ADDED PAGE 4 FOR FOG LIGHT BRACKET (PCR #210546) — By: G. Y. — Date: BLG 2/5/20
UNITS: INCHES	Title: HEADLIGHT BRACKETS	I.D. # 2021\HE\PROFILE\KG\HDLT_SUPT_BRKT	Date: 12/23/19	Date: 12/24/19	Revision: Print no longer pending. — By: B. L. G. — Date: BLG 12/24/19
TITLE BLOCK: 1–2FULTB					