| ITEM # | QTY | NEWMAR # | DESCRIPTION |
|---|---|---|---|
| 2 | 2 | 153106 | BRKT HEADLIGHT B 21KG 7GA BLK |

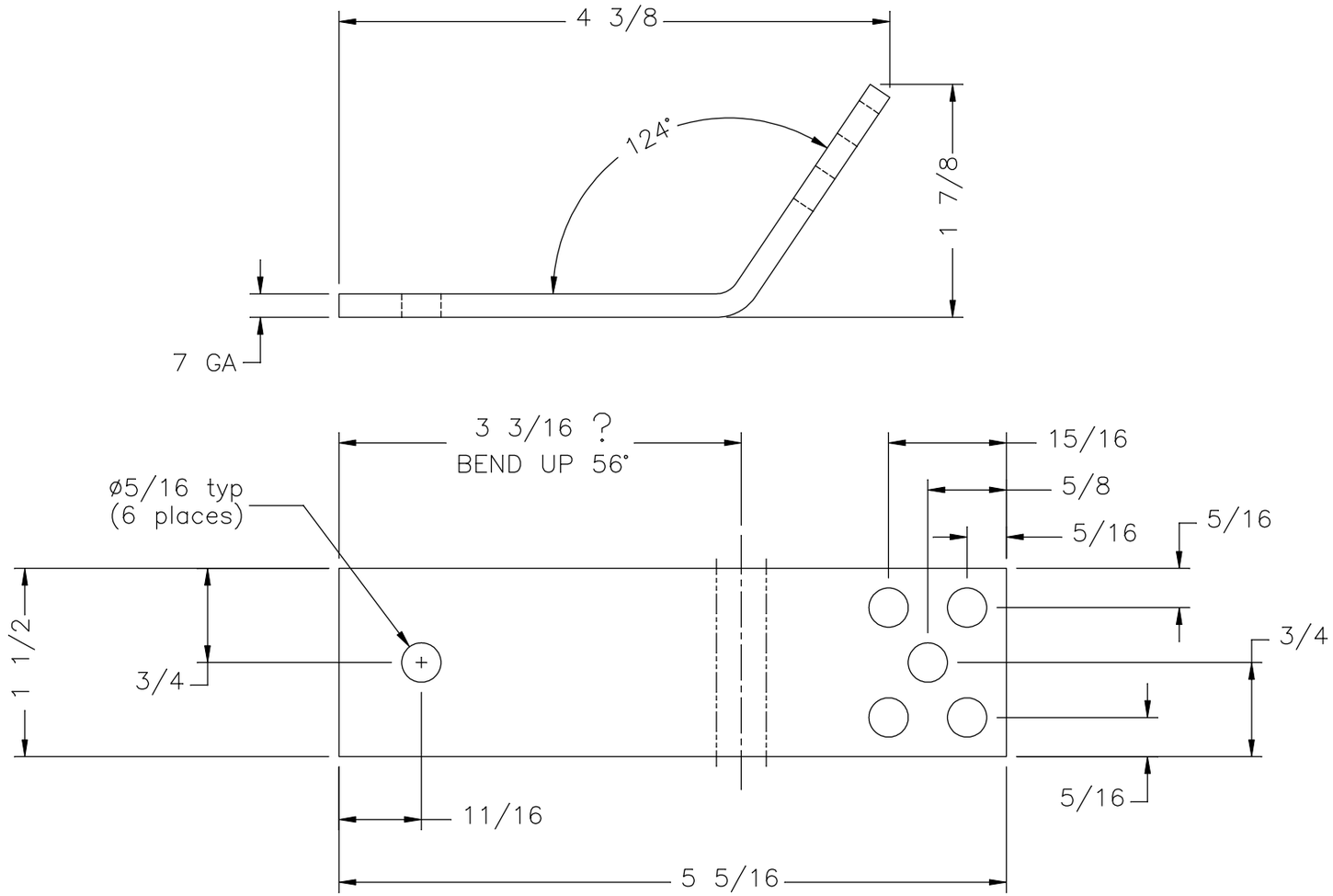


NOTES;

1; MATERIAL: STEEL 7GA

2; FINISH: POWDERCOAT, BLACK

| | | | | | | |
|---|---|---|---|---|---|---|
| NEWMAR CORP<br>P.O. Box 30,<br>Nappanee, IN. 46550 | Model:<br>KGDB | Sheet<br>2 OF 4 | Drawn by:<br>K. B. | Checked by:<br>B. L. G. | Revision: UPDATED ITEM DESCRIPTIONS PAGES 1–3, ADDED PAGE 4 FOR FOG LIGHT BRACKET (PCR #210546) | By: G. Y.<br>Date: BLG 2/5/20 |
| UNITS: INCHES<br>TITLE BLOCK: 1–2FULTB | Title:<br>HEADLIGHT BRACKETS | I.D. # 2021\HE\PROFILE\KG\HDLT_SUPT_BRKT | Date:<br>12/23/19 | Date:<br>12/24/19 | Revision: Print no longer pending. | By: B. L. G.<br>Date: BLG 12/24/19 |