ITEM #	QTY	NEWMAR #	DESCRIPTION
1	–	153260	TABLE–FREESTND BERM 30.5X27X42
2	–	153261	TABLE–FREESTND NEWP 30.5X27X42
3	–	153262	TABLE–FREESTND GLCR 30.5X27X42

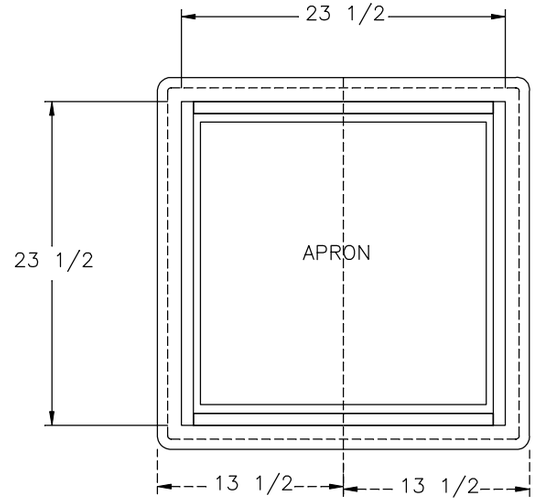

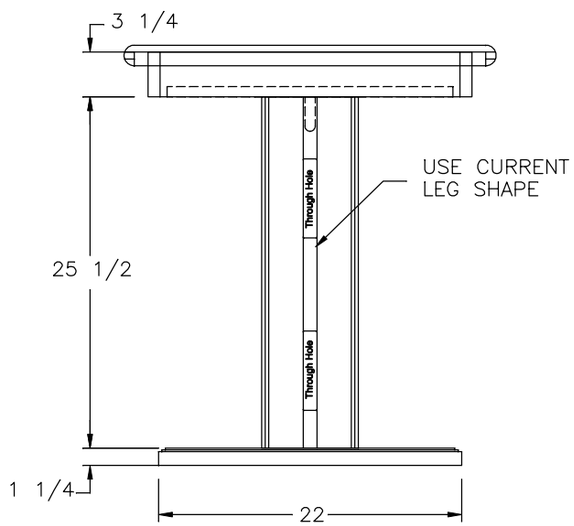

END VIEW

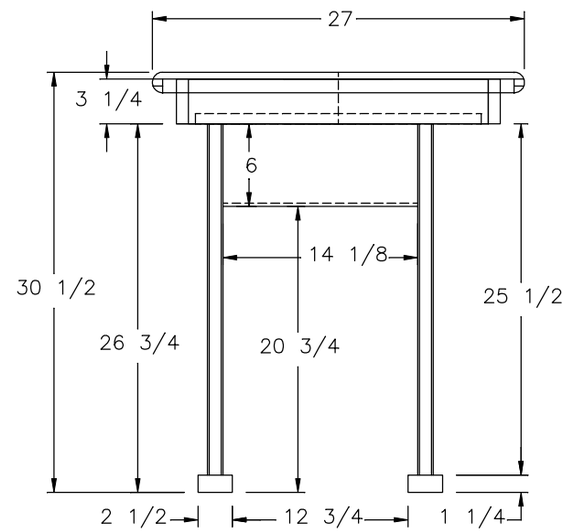

SIDE VIEW NO LEAF

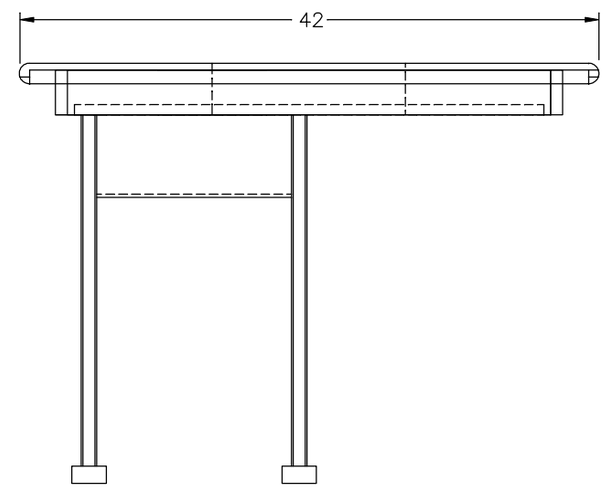

SIDE VIEW w/LEAF

NEWMAR CORP *P.O. Box 30,* *Nappanee, IN. 46550*	Model: BS CA 3414	Sheet 2 OF 2	Drawn by: R. R.	Checked by: D. E.	Revision:	By:
UNITS: INCHES						Date:
TITLE BLOCK: 1TB	Title: FREE STANDING DINETTE	I.D. # 2021\ CA\CAB\KT\ DK5010	Date: 1/13/20	Date: 2/12/20	Revision:	By:
						Date: