ITEM #	QTY	NEWMAR #	DESCRIPTION
1	1	153428	FUEL FILL HOSE SHIELD DRV

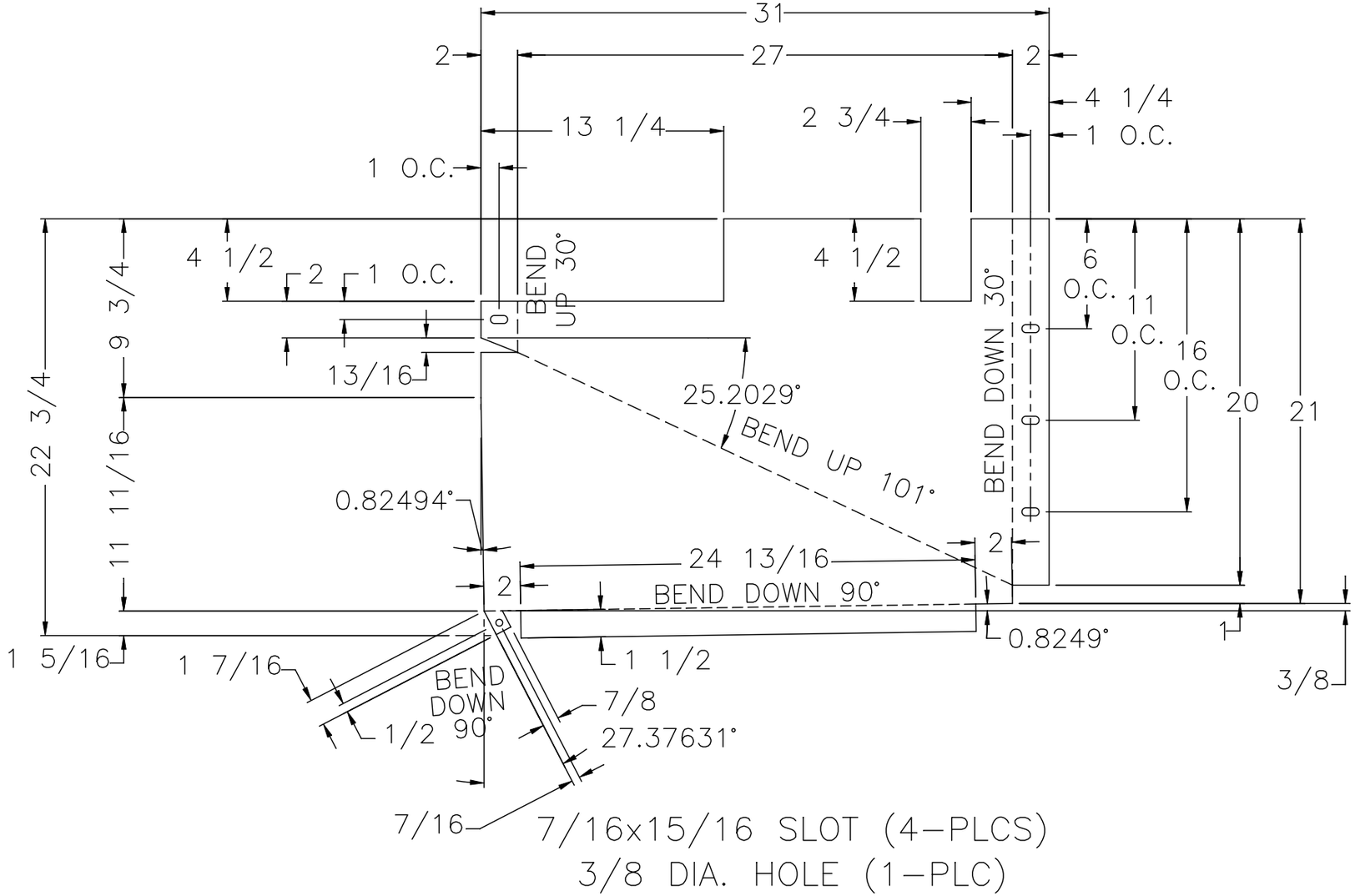

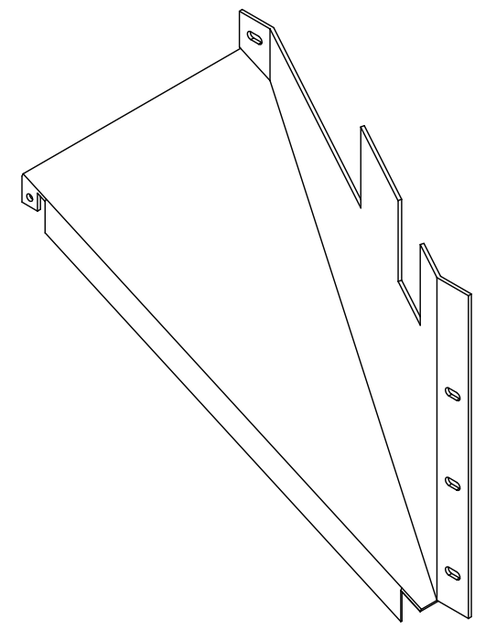

MAT'L: 10GA STL-BLACK POWDER COAT

NEWMAR CORP P.O. Box 30, Nappanee, IN. 46550	Model: KING AIRE	Sheet 1 OF 3	Drawn by: R. P.	Checked by: B. L. G.	Revision: REMOVED PENDING, NEW PRINT FOR 2021 (PCR #210566)	By: G. Y.
						Date:BLG 3/9/20
UNITS: INCHES	Title: DRIVER SIDE FUEL FILL SHIELD	I.D. # 2021\HE\FRAME\PARTS\KG_FUEL_SHLD	Date: 7/25/19	Date: 3/9/20	Revision:	By:
TITLE BLOCK: 75TB						Date: