ITEM #	QTY	NEWMAR #	DESCRIPTION
1	1	153471	FUEL FILL GUARD FRAME–ODS
2	1	153472	FUEL FILL GUARD COVER PLATE
3	1	153473	FUEL FILL GUARD COVER PLATE

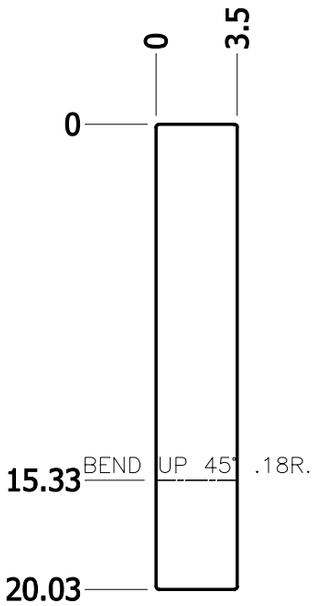

FLAT PATTERN VIEW

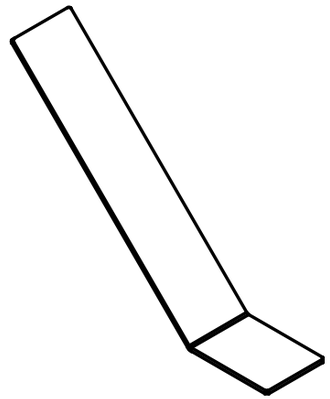

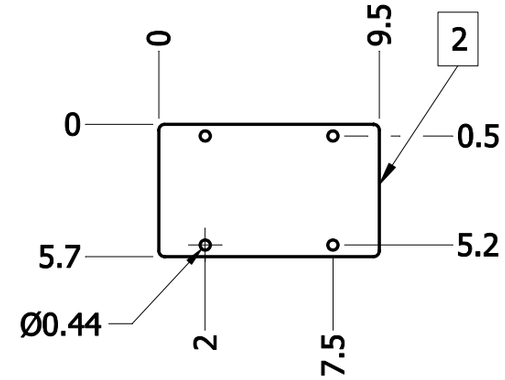

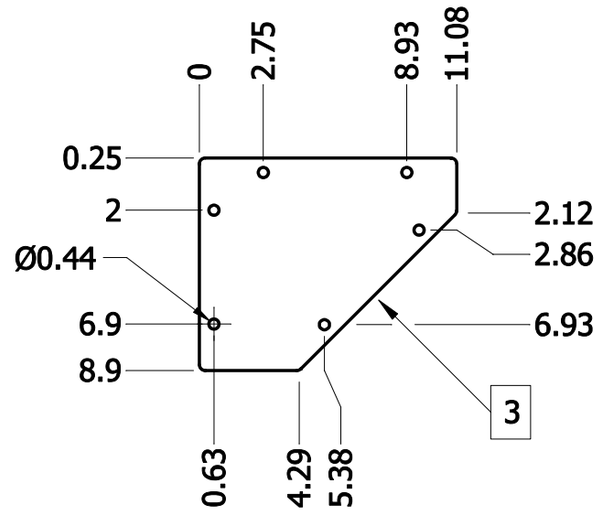

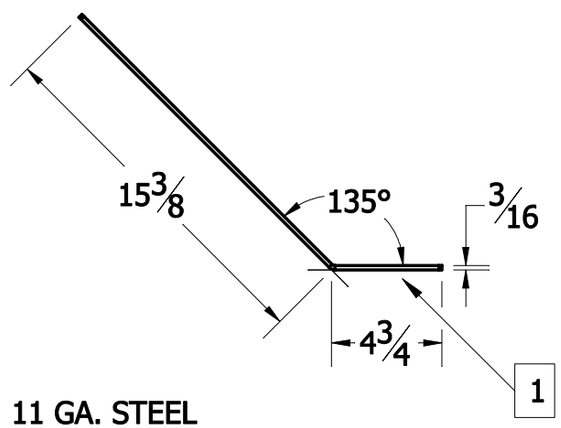

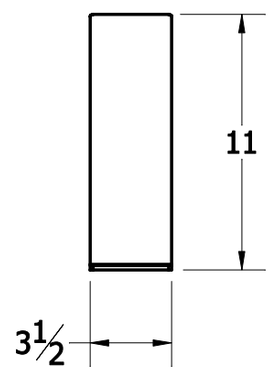

MATERIAL: 11 GA. STEEL

NEWMAR CORP P.O. Box 30, Nappanee, IN. 46550	Model: VT DP (SEE INDEX) (C995)	Sheet 3 OF 3	Drawn by: T. T. S.	Checked by: B. B.	Revision: CREATED NEW PRINT FOR 2021. (PCR #210743)	By: T. T. S.
						Date:BB 3/13/20
UNITS: INCHES	Title: ODS PROTECTION COVER FRAME AND PLATE (SPARTAN)	I.D. # 2021\DP\FRAME\PARTS\FUEL_FILL_GUARDS_ODS	Date: 3/12/20	Date: 3/13/20	Revision:	By:
TITLE BLOCK: 1–5TB						Date: