ITEM #	QTY	NEWMAR #	DESCRIPTION
1	2	153490	BRKT CYLINDER ENGINE DOOR

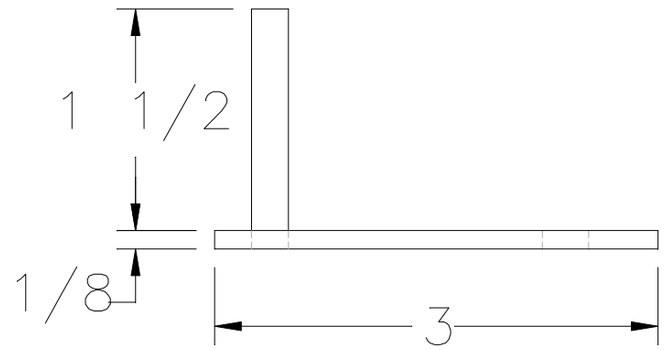

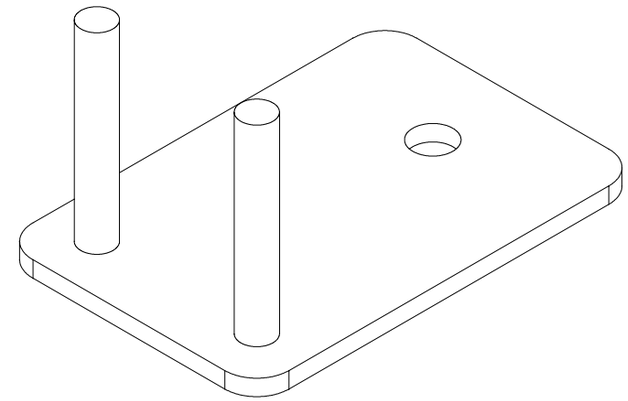

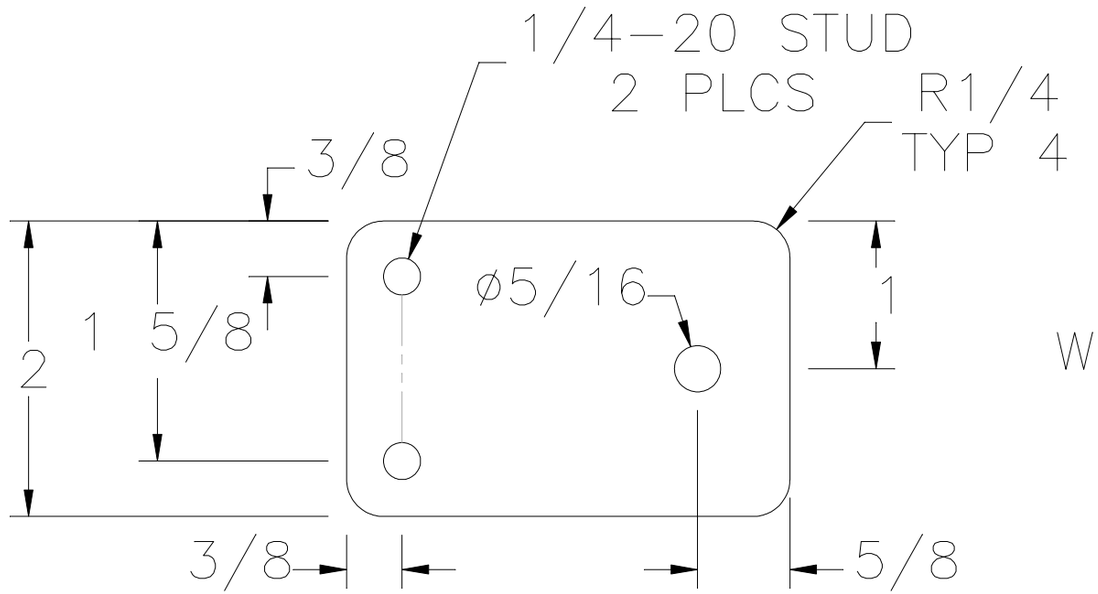

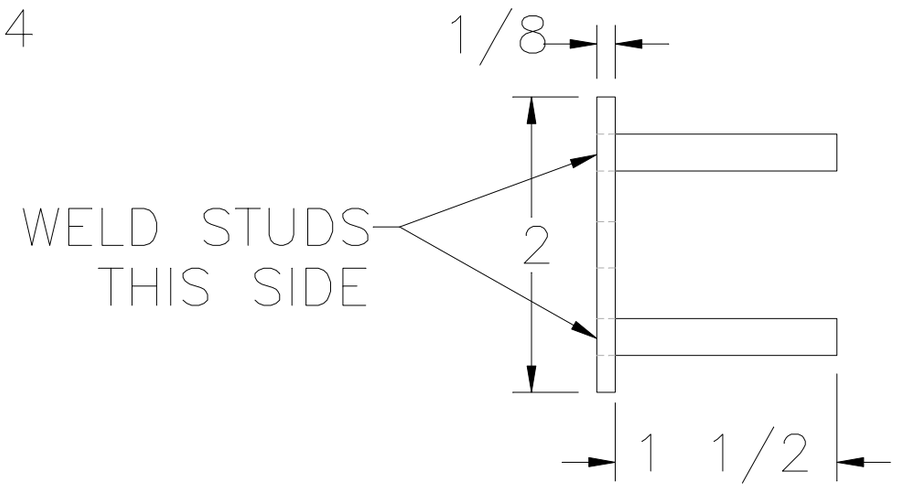

POWDER COAT: BLK

NEWMAR CORP P.O. Box 30, Nappanee, IN. 46550	Model: VT DP (SEE INDEX)	Sheet 1 OF 1	Drawn by: S. J.	Checked by: B. B.	Revision:	By:
						Date:
UNITS: INCHES	Title: 3" ENGINE DOOR CYLINDER BRACKET	I.D. # 2020\DP\PROFILE\PARTS\153490	Date: 10/9/19	Date: 2/25/20	Revision:	By:
TITLE BLOCK: 3125TB						Date: