ITEM #	QTY	NEWMAR #	DESCRIPTION
1	1	126837	TRIM BAG DOOR 10X51.125 15KG
2	1	122865	TRIM BAG DOOR 10X13.625 14KG
3	2	122995	TRIM BAG DOOR 10X2.681 14KG
4	6	122879	TRIM WHL LIP RL ALL FENDR 14KG
5	2	134070	TRIM BAG DOOR 10X5.6875 17KG
6	2	152028	TRIM BAG DOOR 10X22.625
7	2	134072	TRIM BAG DOOR 10X50.125 17KG
8	2	152029	TRIM BAG DOOR 10X28.625
9	4	152030	TRIM BAG DOOR 10X35.125
10	2	134075	TRIM BAG DOOR 10X53.625 17KG
11	2	122993	TRIM BAG DOOR 10X8.682 14KG
12	1	126132	TRIM RADIATOR DOOR 65-1/4"
13	4	126131	RADIATOR DOOR GRILL SLAT 15KG
14	1	122992	TRIM BAG DOOR 10X5.224 14KG
15	1	122870	TRIM BAG DOOR 10X26.375 14KG
16	1	158099	LIGHTING KIT-GROUND EFFECT

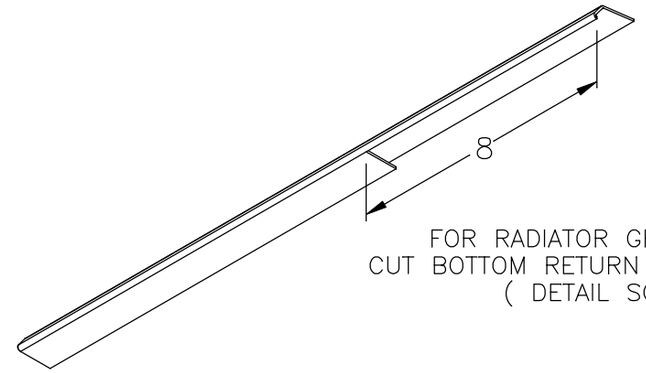

FOR RADIATOR GRILL, PART'S # 13
CUT BOTTOM RETURN BACK 8" AT REAR.
(DETAIL SCALED X8)

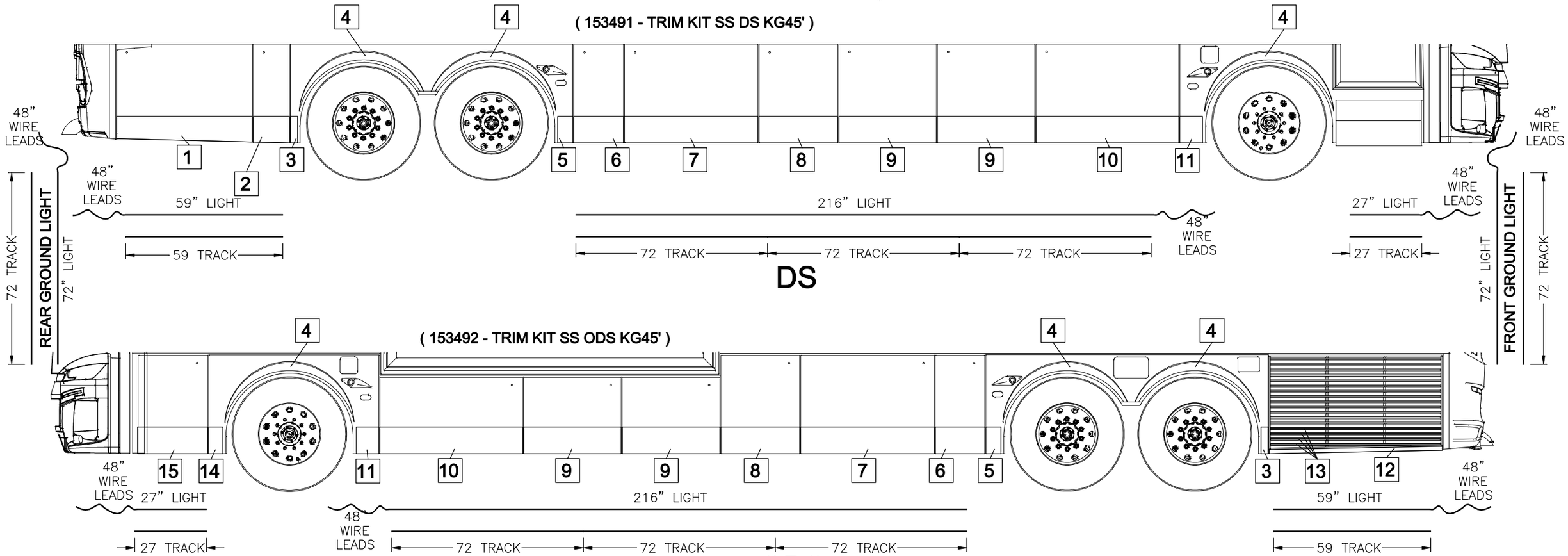

NEWMAR CORP P.O. Box 30, Nappanee, IN. 46550	Model: KGDB (R050)	Sheet 1 OF 1	Drawn by: R. P.	Checked by: B. L. G.	Revision:	By:
						Date:
UNITS: INCHES	Title: SUMMIT SS TRIM KIT & GROUND LIGHTING	I.D. # 2023\HE\PROFILE\KG\R050_GRD_LIGHT	Date: 7/29/21	Date: 9/21/21	Revision:	By:
TITLE BLOCK: 3125TB						Date: