ITEM #	QTY	NEWMAR #	DESCRIPTION
1	1	154039	HAMPER BOX 21X7-7/16X16-3/8

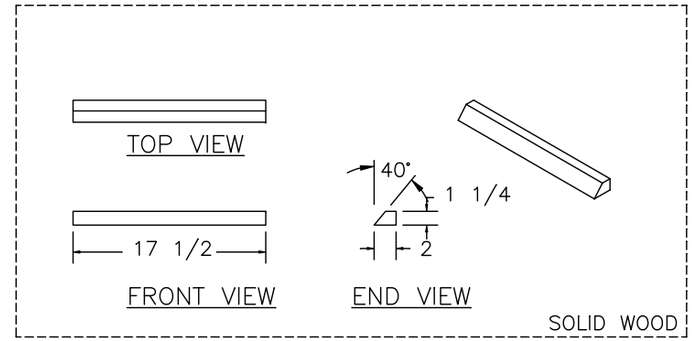

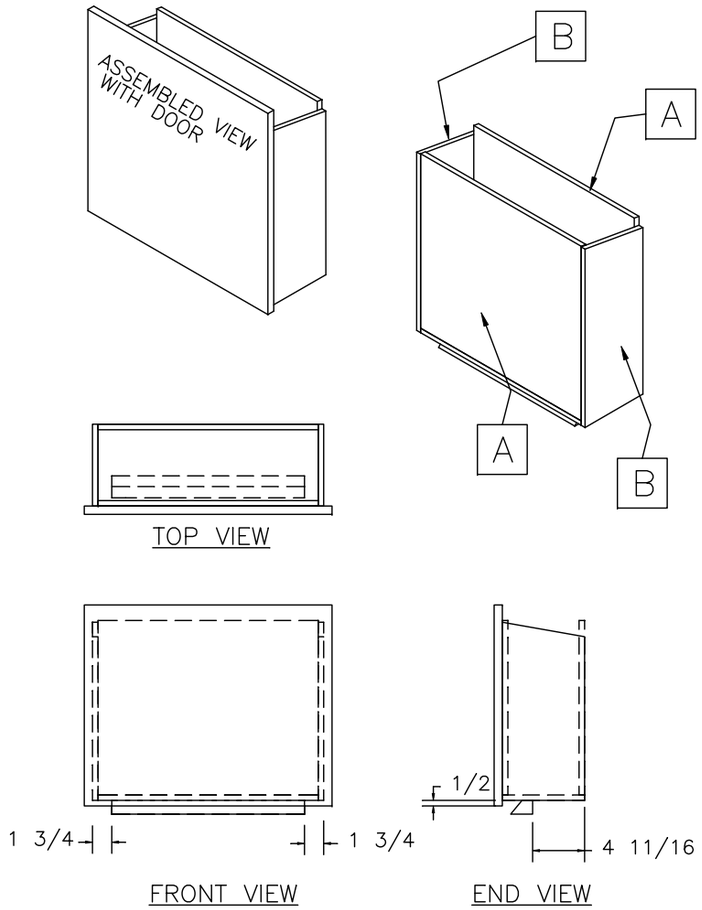

ASSEMBLED VIEWS

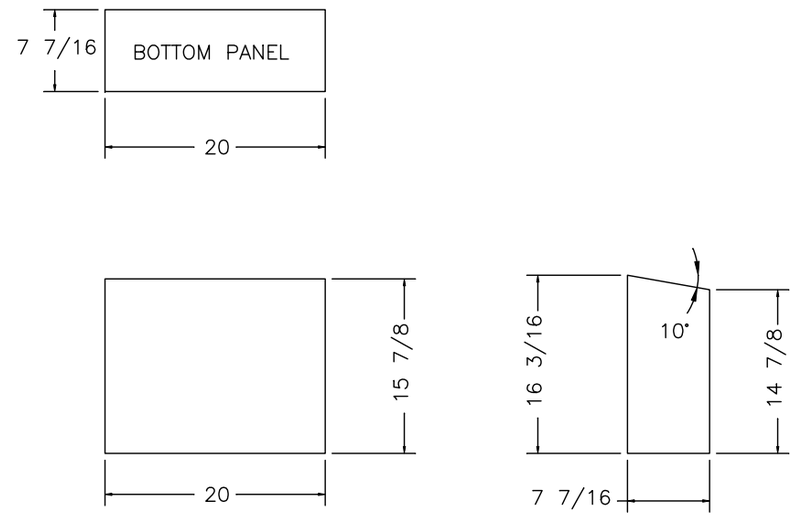

NEWMAR CORP P.O. Box 30, Nappanee, IN. 46550	Model: SSCC 4051	Sheet 1 OF 1	Drawn by: H. Y.	Checked by:	Revision: NEW DRAWING 2021(PCR #210913)	By: Date:
UNITS: INCHES TITLE BLOCK: 1TB	Title: 21" HAMPER	I.D. # 2021\CC\CAB\BA\21_HAMPER	Date: 5/14/20	Date:	Revision:	By: Date: