ITEM #	QTY	NEWMAR #	DESCRIPTION
1	1	154144	PANEL PASS CONS. SWITCH
2	1	154300	SWITCH PNL PASS CON
3	1	154585	WIRELESS CHARGING PLATE MOUNT
4	1	130249	CHARGING KIT WIRELESS
5	1	153399	DECAL WIRELESS CHARGE 7”

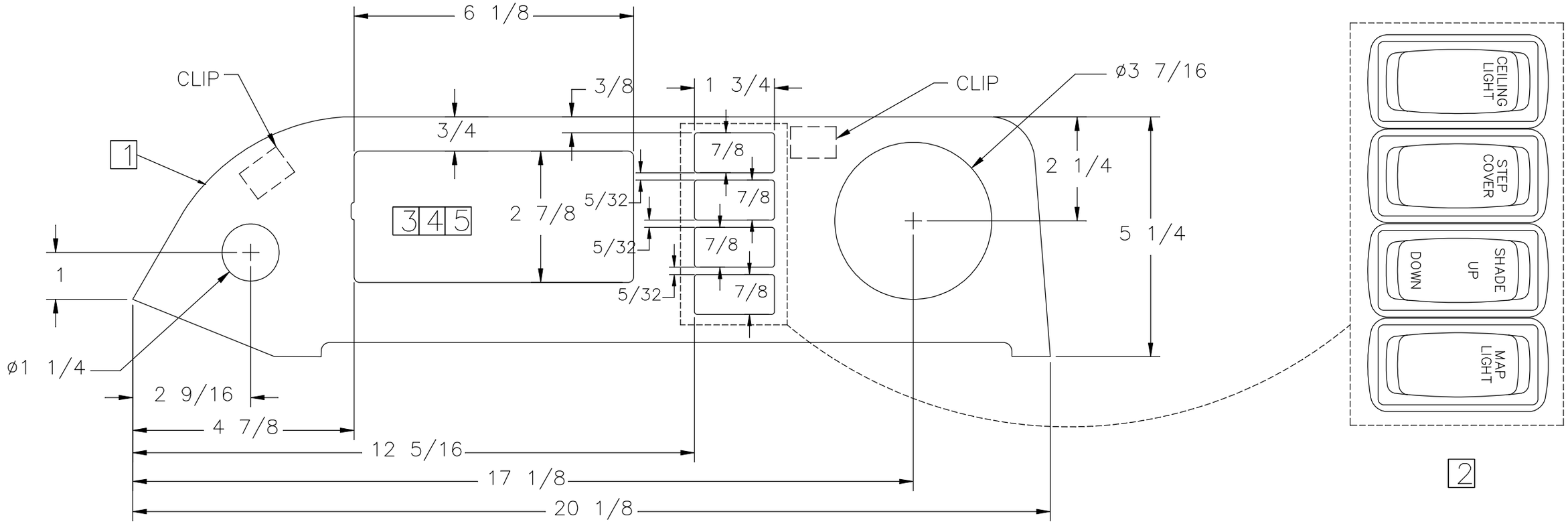

NEWMAR CORP P.O. Box 30, Nappanee, IN. 46550	Model: NADP	Sheet 1 OF 1	Drawn by: G. Y.	Checked by: E. C.	Revision: CHANGED PN# 138707 TO PN# 153399 DECAL WIRELESS CHARGE 7” PER (ECO #91) — By: S. H. — Date: EC 10/15/20
UNITS: INCHES TITLE BLOCK: 1TB	Title: PASS CONSOLE SWITCH PANEL	I.D. # 2021\COMPONENTS\NA_PASS_PANEL	Date: 6/1/20	Date: 6/3/20	Revision: ADD CHARGING PAD COMPONENT REFERENCES (2021 ECO #430) — By: G. Y. — Date: EC 7/30/20