ITEM #	QTY	NEWMAR #	DESCRIPTION
3	2	154335	FENDER REAR

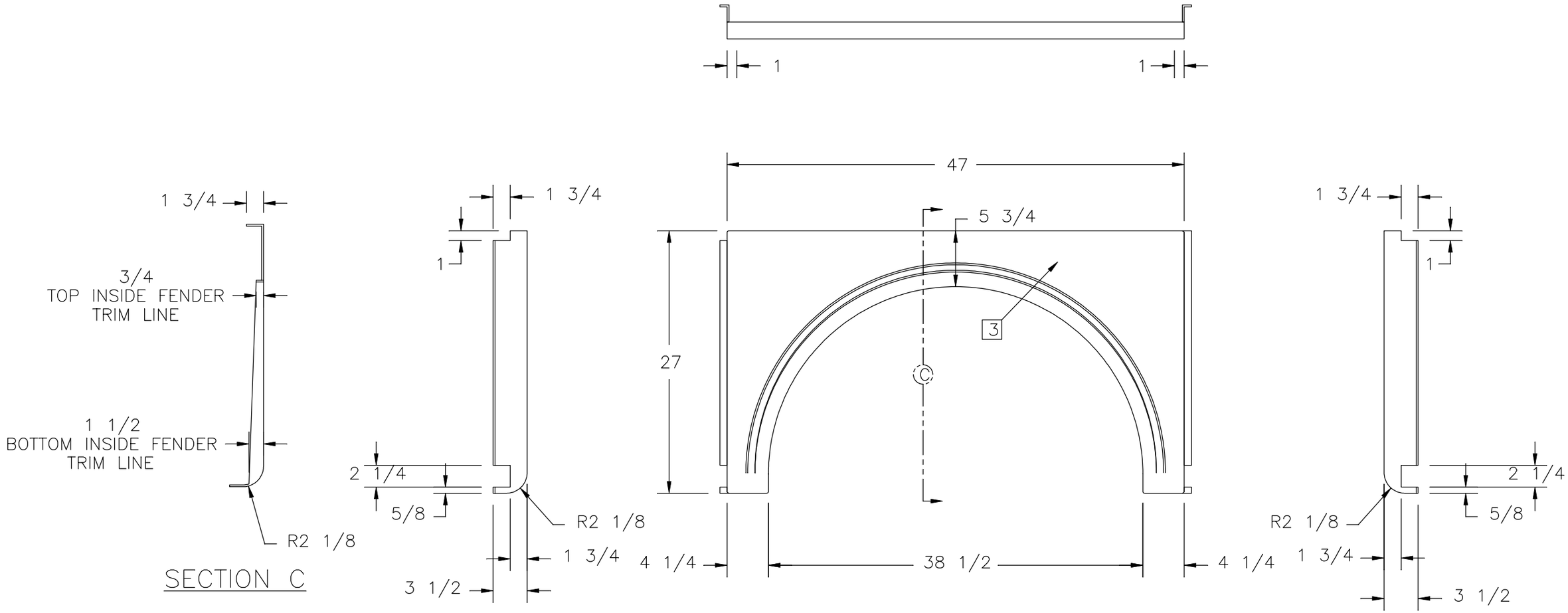

NEWMAR CORP P.O. Box 30, Nappanee, IN. 46550	Model: BTCA (SEE INDEX)	Sheet 3 OF 4	Drawn by: J. H.	Checked by: D. E.	Revision:	By:
						Date:
UNITS: INCHES	Title: FENDER SIZE/TRIMMING	I.D. # 2022\CA\PROFILE\BT\FENDERS	Date: 10/8/20	Date: 10/8/20	Revision:	By:
TITLE BLOCK: 1TB						Date: