CUT PATTERN	
BACK FRAME NO.	
BASE FRAME NO.	
WOOD PATTERN	

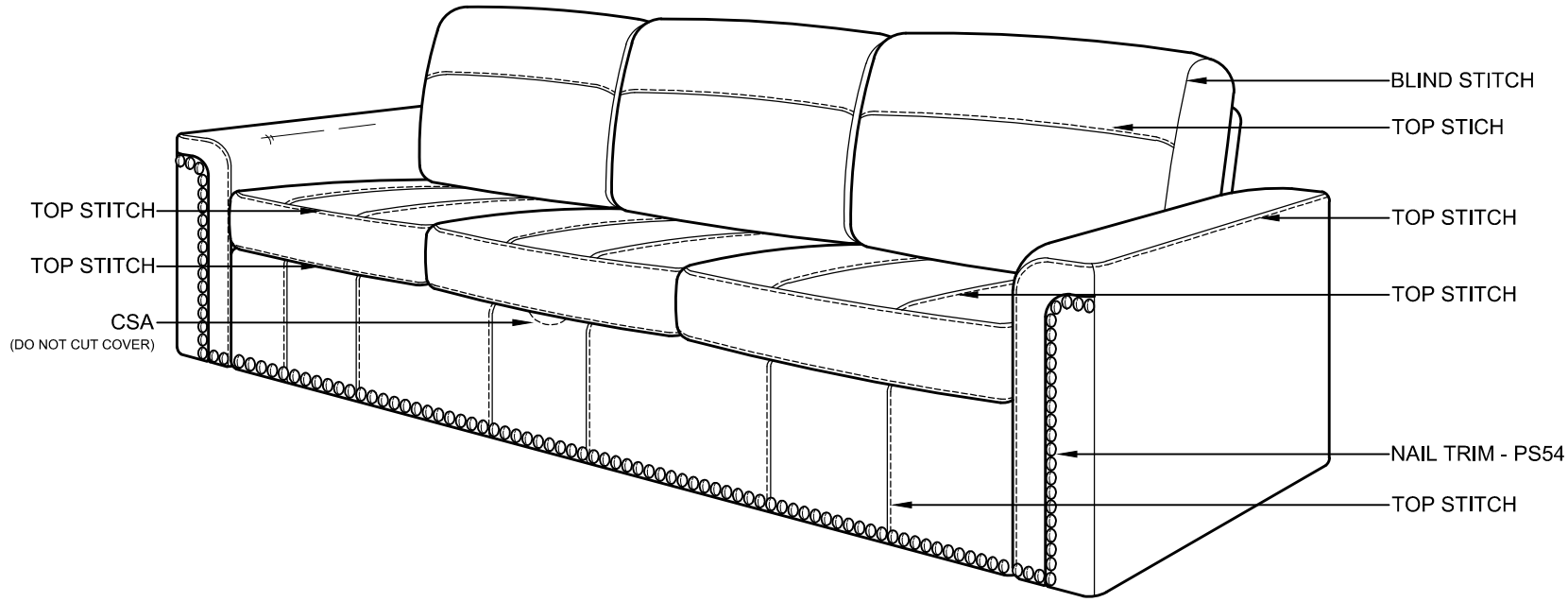

*ARM DETAIL

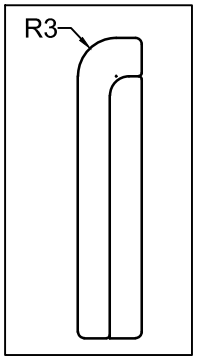

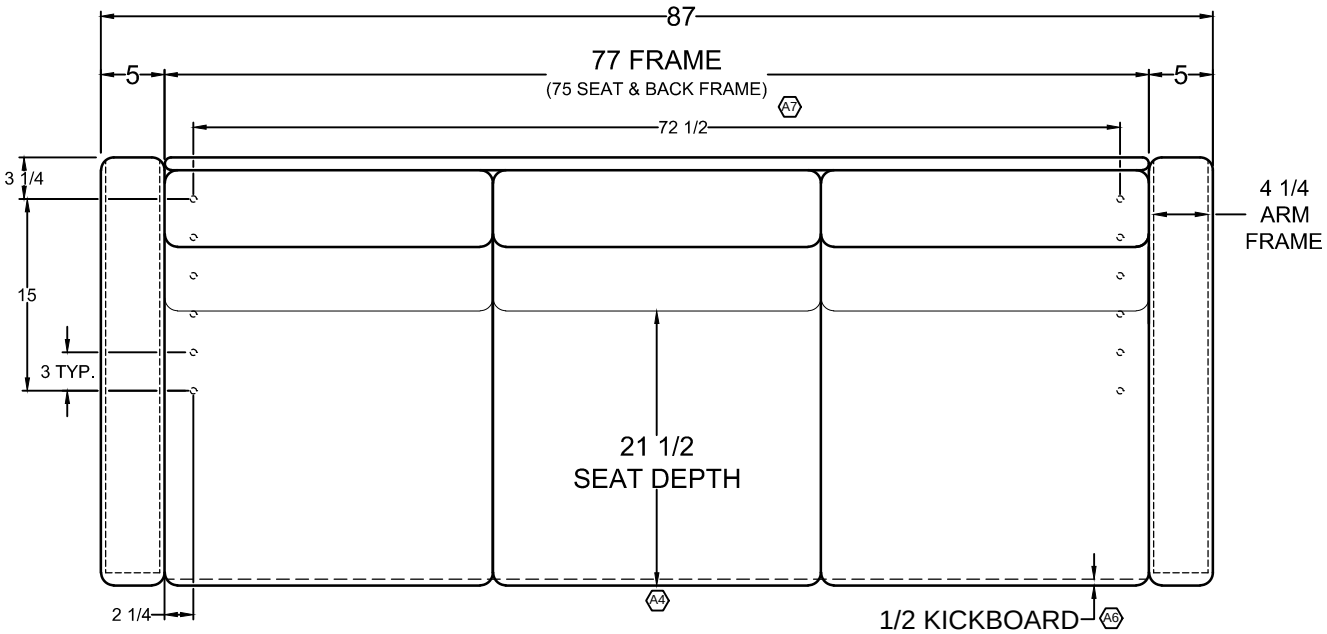

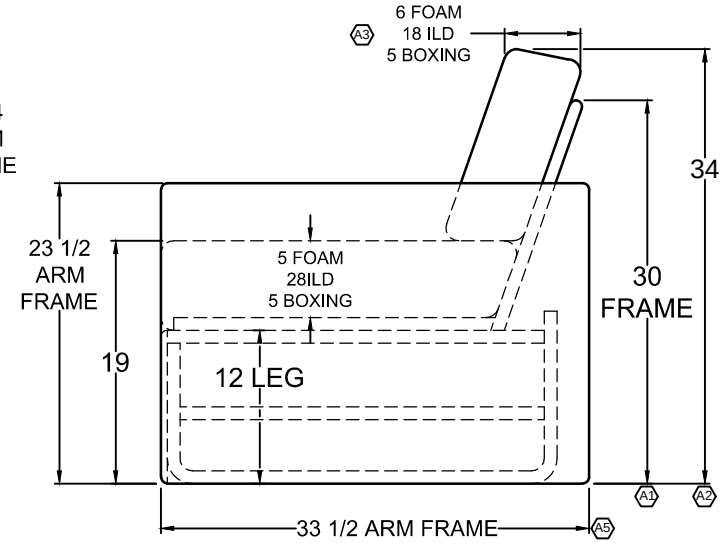

COMFORTFIT
BY VILLA INTERNATIONAL
13760 MIDWAY STREET
CERRITOS CA 90703
(562) 404-8111
FAX (562) 404-7781

TITLE
2022 KSDP - BROOK
87" CSA JACK KNIFE SOFA

DWG. NO. CF2001054
REV. A
DR J.ANCHETA
DATE 09.30.2020
APV FTBM 01.25.21

SCALE 1:1
DO NOT SCALE DRAWING.
UNLESS OTHERWISE SPECIFIED DIMENSIONS ARE IN INCHES.

THIS DRAWING IS THE PROPERTY OF VILLA INTERNATIONAL MFG. ALL RIGHTS RESERVED.

–	–		
JA	A	[1] CHANGE BACK FRAME HEIGHT TO 30". WAS 31". [2] ADD 34" O.A. HEIGHT DIM TO DRAWING. [3] CHANGE BACK PILLOW FOAM DETAILS TO 6 FOAM & 5 BOXING. WAS 5 FOAM & 4 BOXING. [4] CHANGE SEAT DEPTH TO 21-1/2". WAS 21". [5] CHANGE ARM FRAME DEPTH TO 33-1/2". WAS 33". [6] ADD 1/2" KICKBOARD DEPTH DIM TO DRAWING. (REF. ORD #0160760). PER FTBM. [7] ADD 75 SEAT & BACK FRAME DIM NOTE TO DRAWING.	12.16.2020

REVISIONS