CUT PATTERN	
BACK FRAME NO.	
BASE FRAME NO.	
WOOD PATTERN	

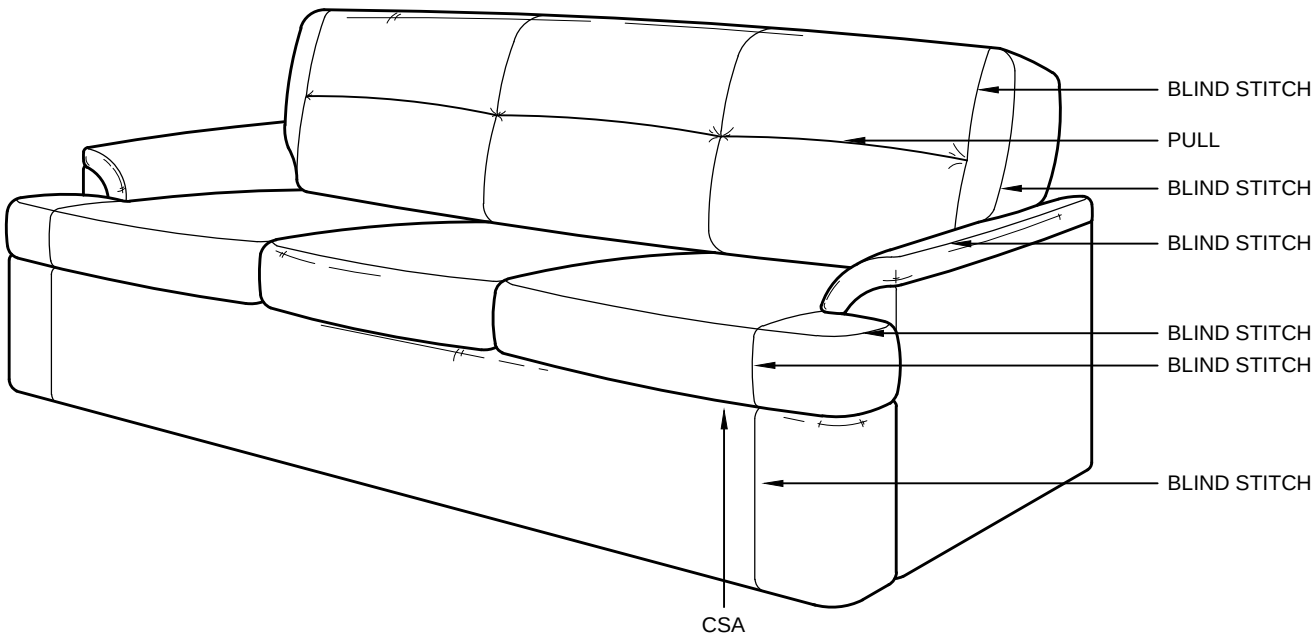

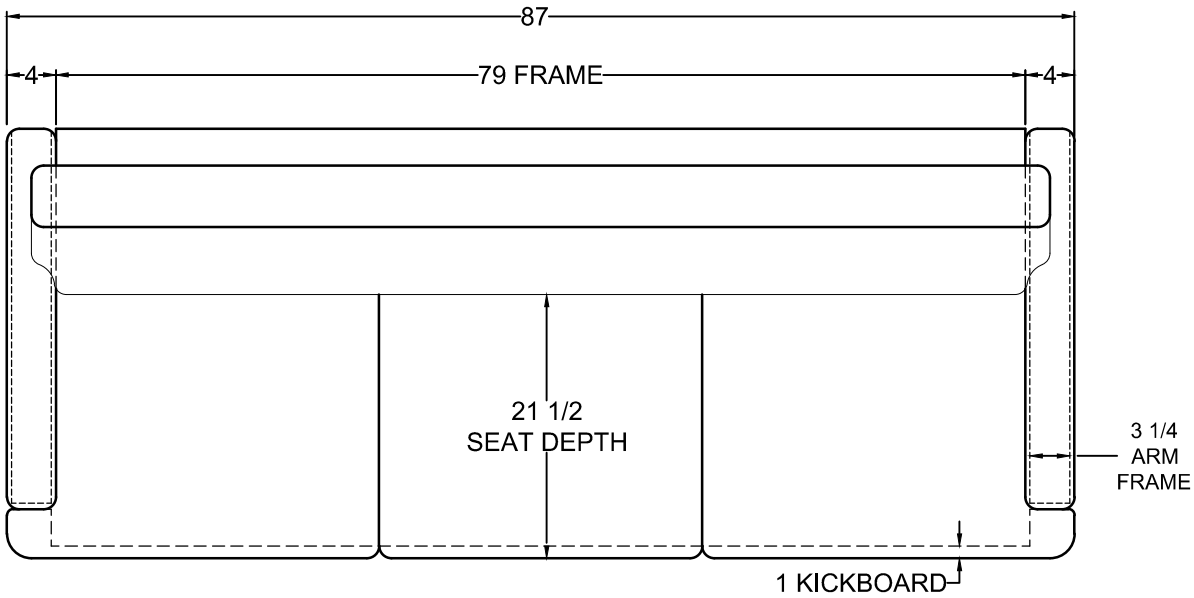

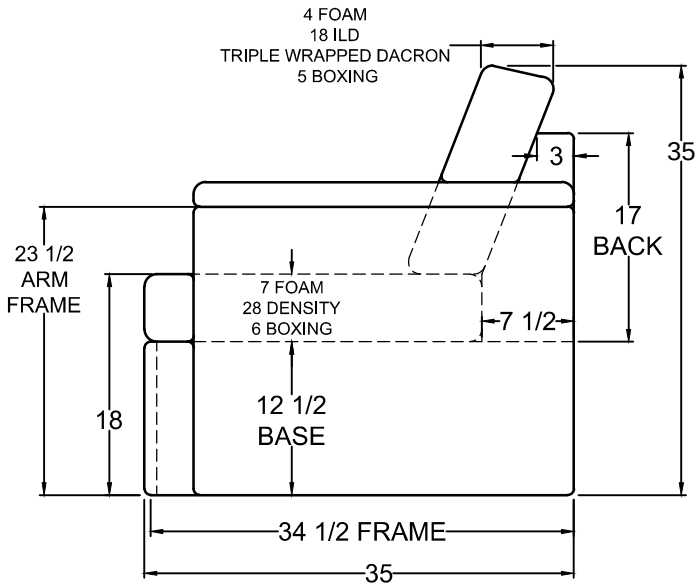

COMFORTFIT
BY VILLA INTERNATIONAL
13760 MIDWAY STREET
CERRITOS CA 90703
(562) 404-8111
FAX (562) 404-7781

TITLE	DWG. NO.	REV.	APV	SCALE 1:1
2022 VTDP/SSCC CSA - 87" SIDEWAYS SOFA BED	CF1000897	--	FTBM 08.20.2020	DO NOT SCALE DRAWING. UNLESS OTHERWISE SPECIFIED DIMENSIONS ARE IN INCHES.
	DR J.ANCHETA	DATE 08.19.2020		

THIS DRAWING IS THE PROPERTY OF VILLA INTERNATIONAL MFG. ALL RIGHTS RESERVED.

REVISIONS