ITEM #	QTY	NEWMAR #	DESCRIPTION
1	1	156491	BRKT MOUNT STEERING COLUMN

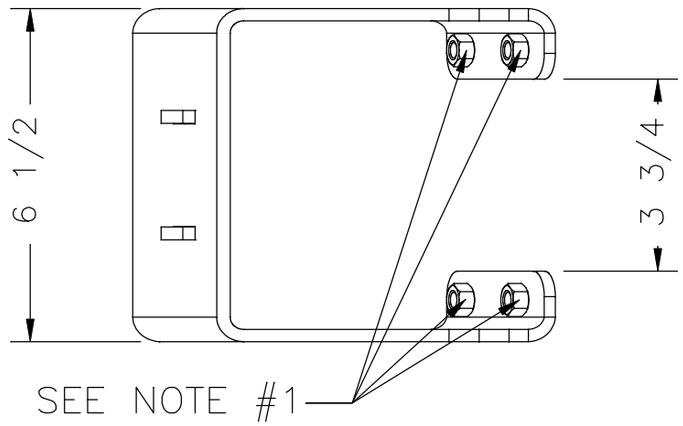

VIEW TOP

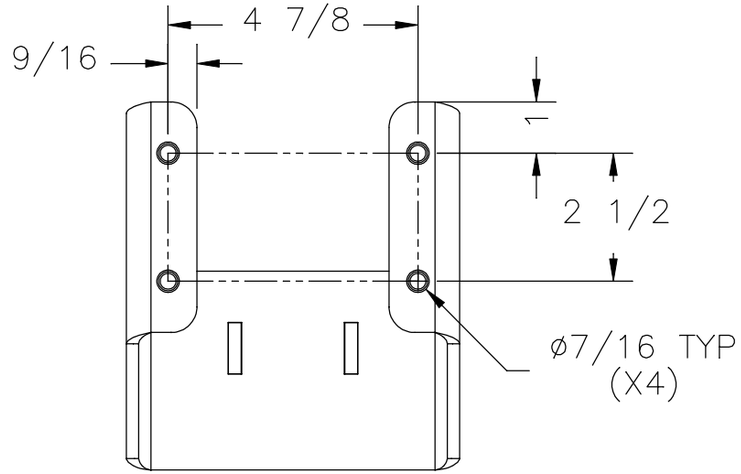

HOLE LOCATION
(HOLD)

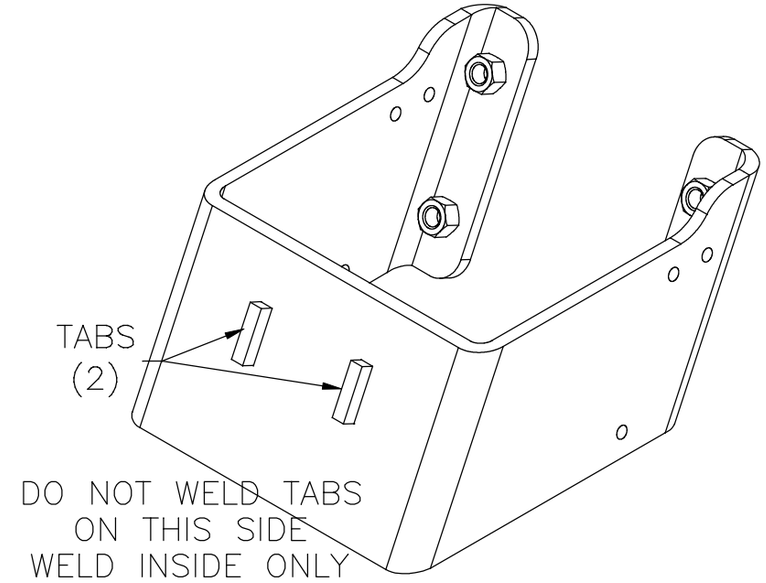

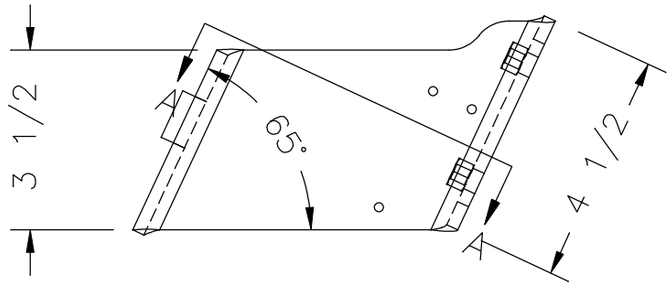

VIEW RIGHT

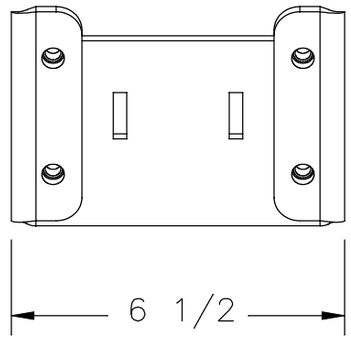

VIEW BACK

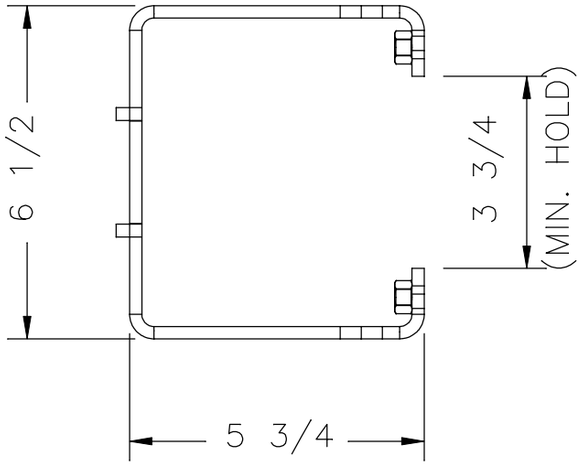

SECTION A–A

NOTES;
1; WELD NUTS SIZE 3/8–16 TO INSIDE, FOUR (4) PLACES.
2; CENTER NUTS ON HOLES.
3; FINISH; POWDER COAT, BLACK (KEEP THREADS CLEAN)

NEWMAR CORP P.O. Box 30, Nappanee, IN. 46550	Model: KGDB	Sheet 1 OF 2	Drawn by: K. B.	Checked by: B. L. G.	Revision: ADD 6 – 3/'6" DIA. HOLES TO THE SIDES OF RHE MOUNTING BRACKET, (ECO #256)	By: R. F. P. Date:BLG 7/6/21
UNITS: INCHES TITLE BLOCK: 1–5TB	Title: TRW STEERING COLUMN MOUNTING BRACKET	I.D. # 2021\HE\FRAME\PARTS\STEER_CLMN_BRKT_1	Date: 10/1/20	Date: 10/20/20	Revision: Created new print fpr 2021 (ECO #559)	By: B. L. G. Date:BLG 10/20/20