ITEM #	QTY	NEWMAR #	DESCRIPTION
A	1	156552	CABINET FOOT MAPLE FLAT CUT
A	1	156553	CABINET FOOT OAK FLAT CUT
B	1	156554	CABINET FOOT MAPLE 135DEG CUT
B	1	156555	CABINET FOOT OAK 135DEG CUT
C	1	156556	CABINET FOOT MAPLE 145DEG CUT
C	1	156557	CABINET FOOT OAK 145DEG CUT
D	1	156558	CABINET FOOT MPL FLATCUT W/MAG
D	1	156559	CABINET FOOT OAK FLATCUT W/MAG

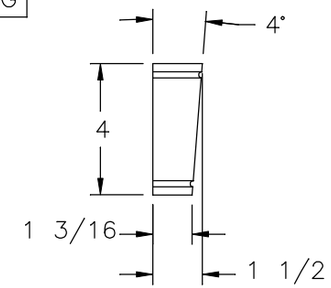

PROFILE

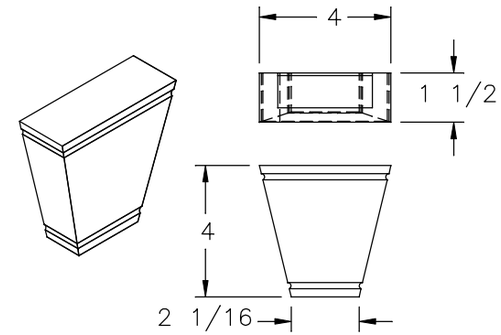

BLOCK "A"

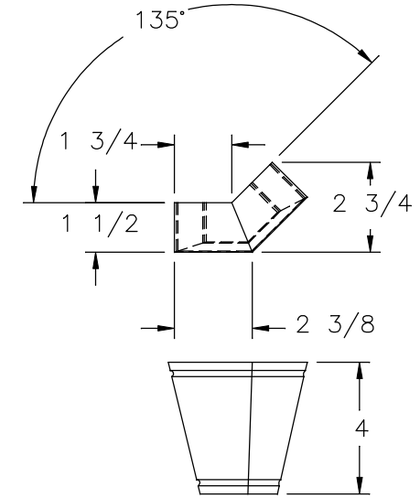

BLOCK "B"

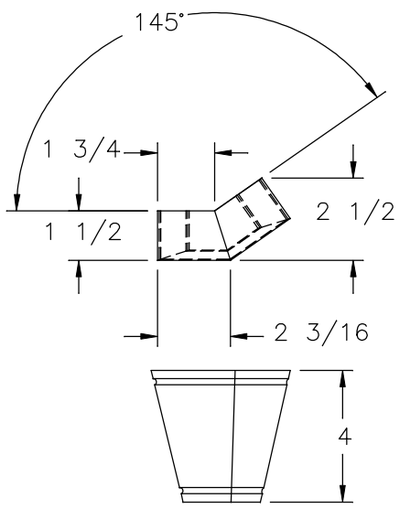

BLOCK "C"

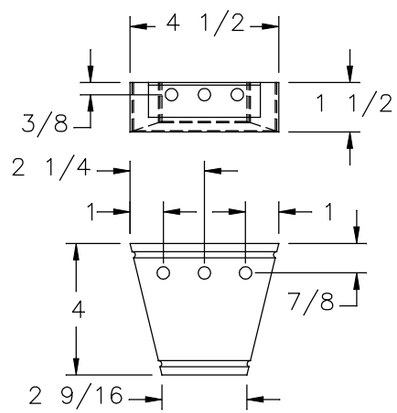

FOOT W/ 6 MAGNETIC INSERTS
INSTALLED BY VENDOR
(3 TOP / 3 BACK)

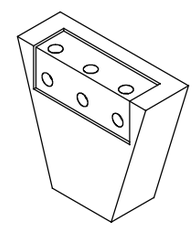

RECESS DETAIL
(BACK & TOP)

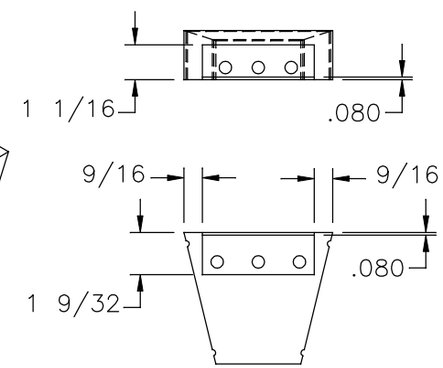

BACK VIEW

BLOCK "D"

NEWMAR CORP P.O. Box 30, Nappanee, IN. 46550	Model: NADP (TYPICAL)	Sheet 1 OF 1	Drawn by: G. Y.	Checked by: E. C.	Revision: / By: / Date:
UNITS: INCHES TITLE BLOCK: 1-5TB	Title: KITCHEN BASE CABINET FEET DETAIL	I.D. # 2022\HE\CAB\KT\MISC6002	Date: 8/26/20	Date: 10/20/20	Revision: / By: / Date: