ITEM #	QTY	NEWMAR #	DESCRIPTION
1	4	157064	DRAWER GUIDE CABINET 8"
2	4	157065	DRAWER GUIDE DRAWER 8"
3	1	156643	DASH DRAWER BOX W/DRAWERS

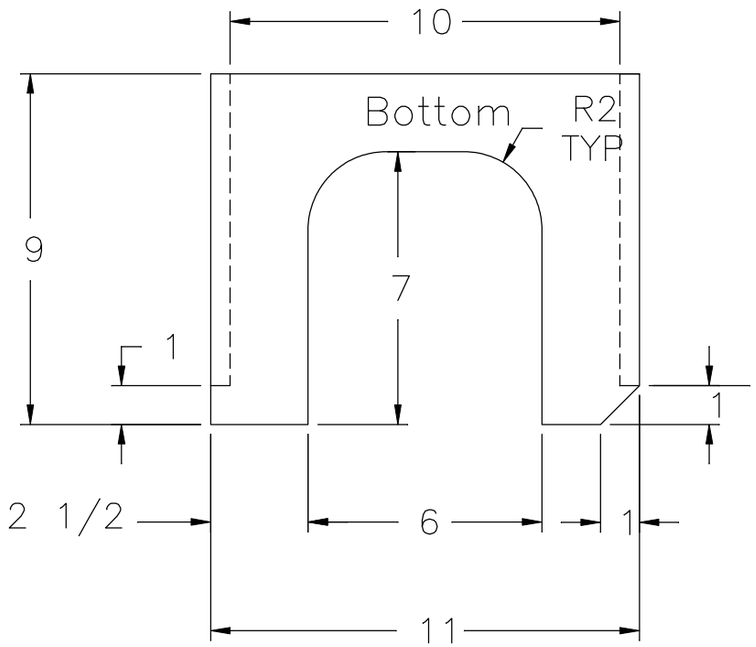

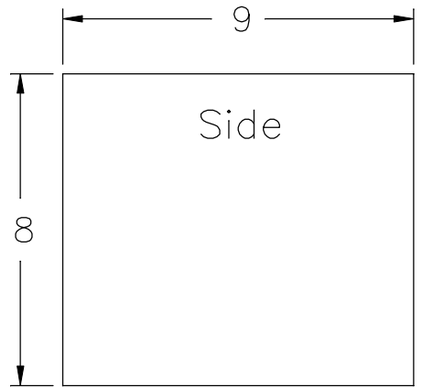

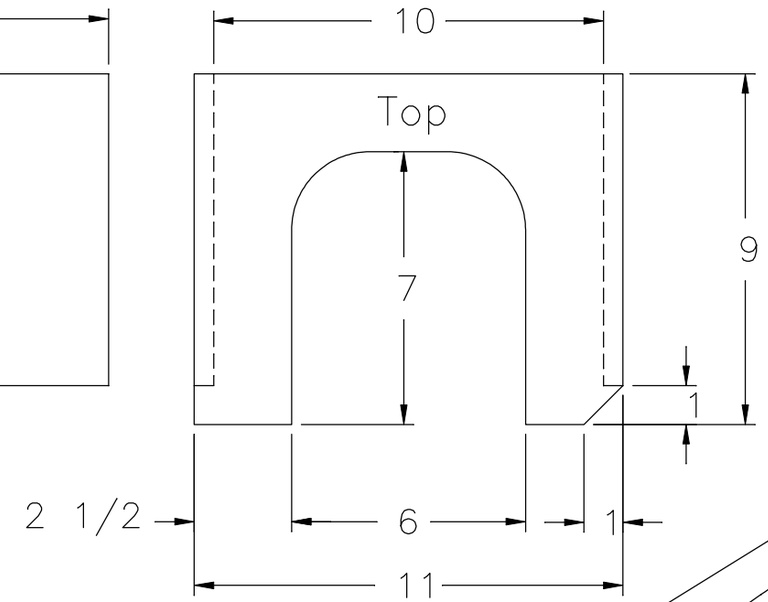

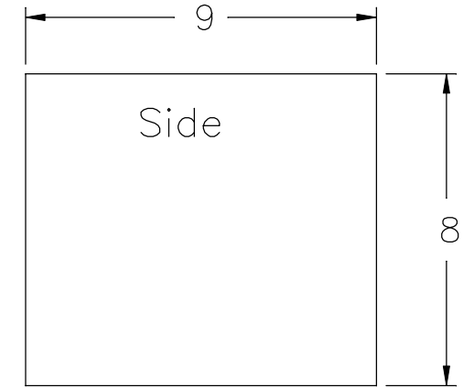

12mm Luan

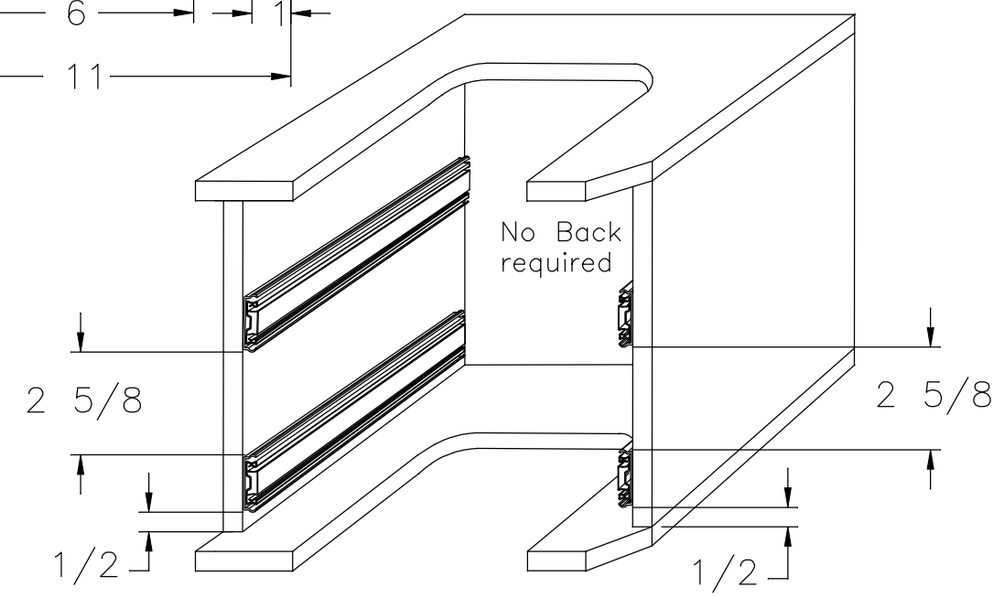

NEWMAR CORP P.O. Box 30, Nappanee, IN. 46550	Model: NADP, DSDP	Sheet 1 OF 2	Drawn by: K. B.	Checked by: B. B.	Revision: CHANGED PART NUMBERS FOR DRAWER SLIDES PER 2021 (ECO #984) By: S. H. Date: BLG 3/10/21
UNITS: INCHES	Title: Dash Drawer Box	I.D. # 2019\DP\CAB\LR\MISC3011	Date: 2/21/18	Date: 2/21/18	Revision: REPLACED PART #138671 WITH NEW 156643. (2021 ECO #697) By: V. K. Date: BB 10/23/20
TITLE BLOCK: 1-4FULTB					

ITEM #	QTY	NEWMAR #	DESCRIPTION
1	4	157064	DRAWER GUIDE CABINET 8"
2	4	157065	DRAWER GUIDE DRAWER 8"
3	1	156643	DASH DRAWER BOX W/DRAWERS

Frt View of ABS drawer fronts

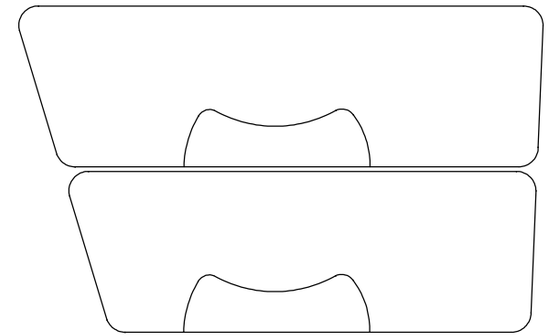

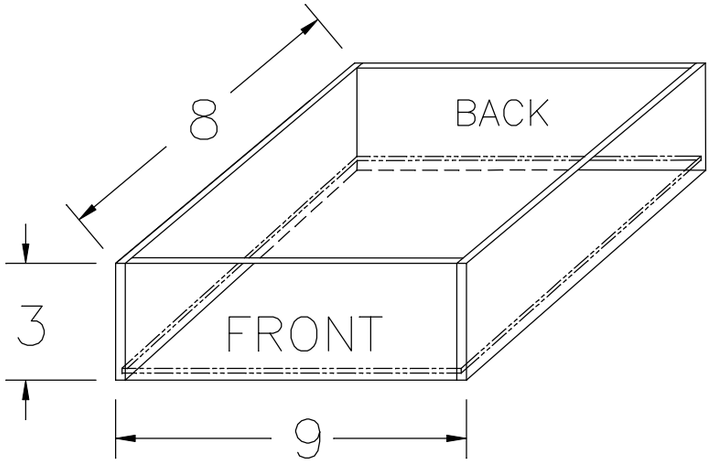

2 drawer boxes required

Top View of ABS drawer front

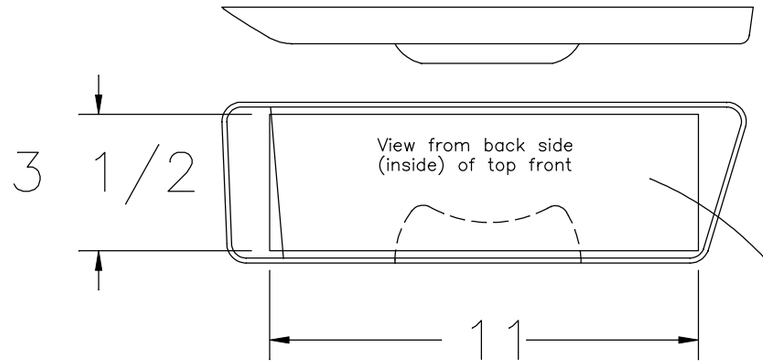

** Add 18 mm inside ABS drawer fronts prior to attaching boxes

Top View of ABS drawer front

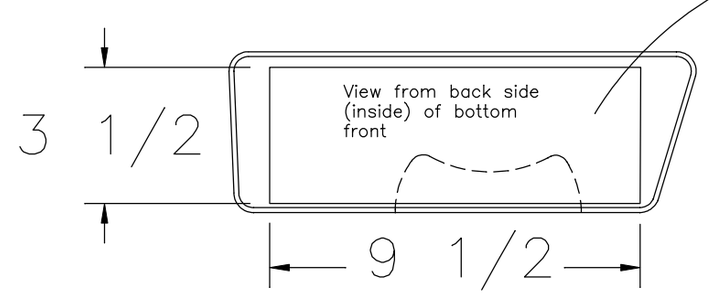

NEWMAR CORP P.O. Box 30, Nappanee, IN. 46550	Model: NADP, DSDP	Sheet 2 OF 2	Drawn by: K. B.	Checked by: B. B.	Revision: REPLACED PART #138671 WITH NEW 156643. (2021 ECO #697)	By: V. K. Date:BB 10/23/20
UNITS: INCHES	Title: Dash Drawers	I.D. # 2019\DP\CAB\LR\MISC3011	Date: 2/21/18	Date: 2/21/18	Revision: NEW PRINT FOR 2019 AND ADDED DSDP TO MODEL (PCR #190468)	By: K. B. Date:BB 2/21/18
TITLE BLOCK: 1-4FULTB						