TEST: 33N-3N-23A

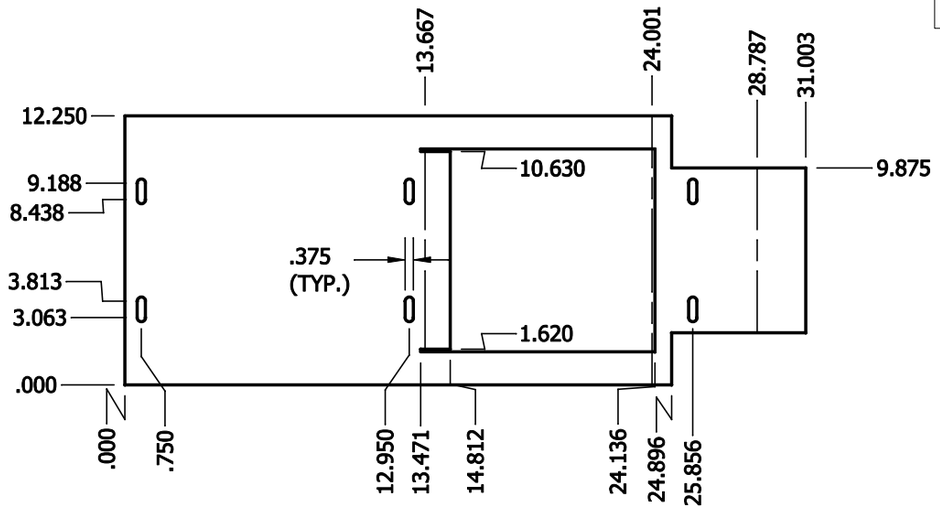

FLAT PATTERN

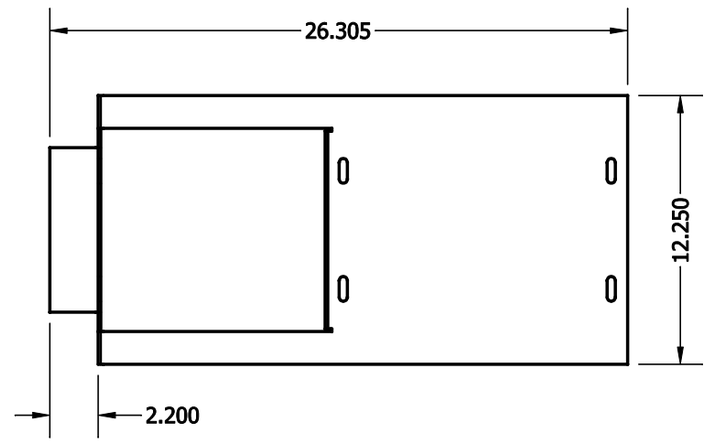

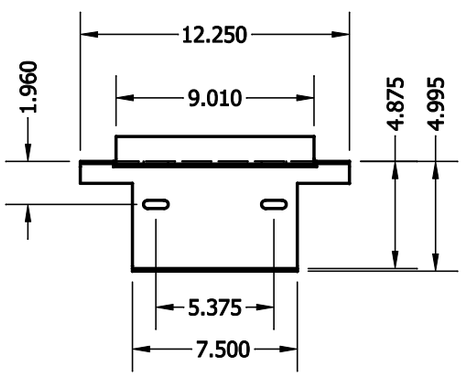

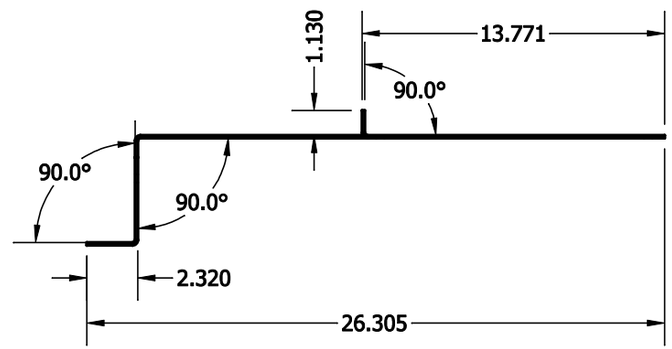

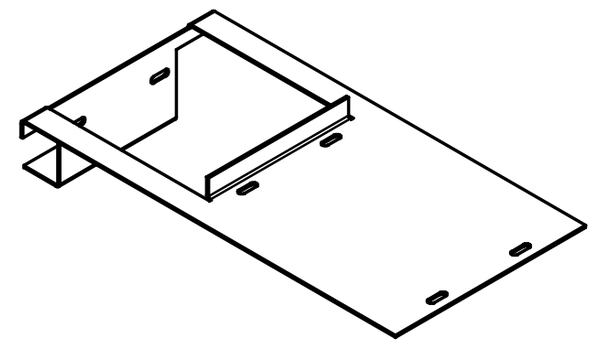

NOTES:
1. MATERIAL: .120" (11 GA.) STEEL
2. PATH: P:\SLIDEOUT\Seatbelt_Testing\2023\33N-3N-23A\BRKT_157066

REVISIONS:
- REMOVED 1" LEG AND EXTENDED FRONT OF PART.
- ADDED 1/8" ON BOTTOM LEG. WAS 2.195", NOW 2.32"
- CHANGED THE FRONT WIDTH TO 8 1/4" INSTEAD OF 9 1/4"
- CHANGED THE FRONT WIDTH TO 7 1/2" INSTEAD OF 8 1/4"
- REMOVED REAR CUTOUT

TITLE	Bracket, HWH Lift Mechanism Cylinder Support		
DWG NO	157066		SHEET 1 OF 1
USAGE	SEE PRINT INDEX		
DRAWN	bseegert	DATE	
CHECKED		DATE	