ITEM #	QTY	NEWMAR #	DESCRIPTION
1	1	157289	KITFASCIA3545MPLRAWSTND
1	1	163038	KITFASCIA3545OAKRAWSTND

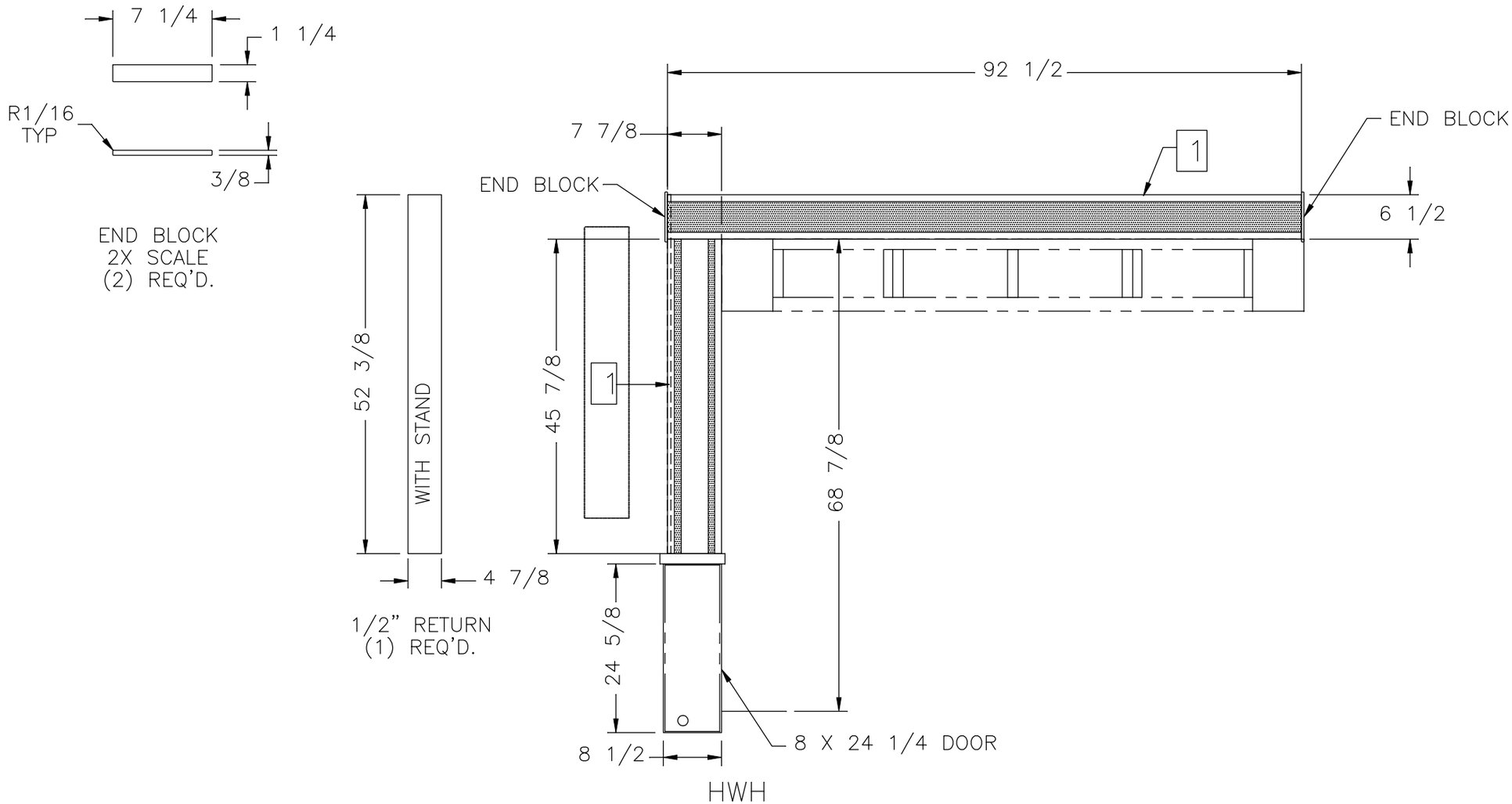

DS LIVING ROOM S–O FASCIA

NEWMAR CORP *P.O. Box 30,* *Nappanee, IN. 46550*	Model: NADP 3545	Sheet 1 OF 5	Drawn by: G. Y.	Checked by: M. N.	Revision: PART NUMBER CHANGE FROM 157290 TO 163038 FOR RED RIFT OAK (PCR #231839)	By: G. Y. Date:EC 5/25/22
UNITS: INCHES	Title: FASCIA	I.D. # 2023\HE\CAB\FASCIA\NA3545	Date: 11/9/21	Date: 11/11/21	Revision:	By: Date:
TITLE BLOCK: 80D						