ITEM #	QTY	NEWMAR #	DESCRIPTION
1	1	157473	BRKT HEADLIGHT TOP BLK

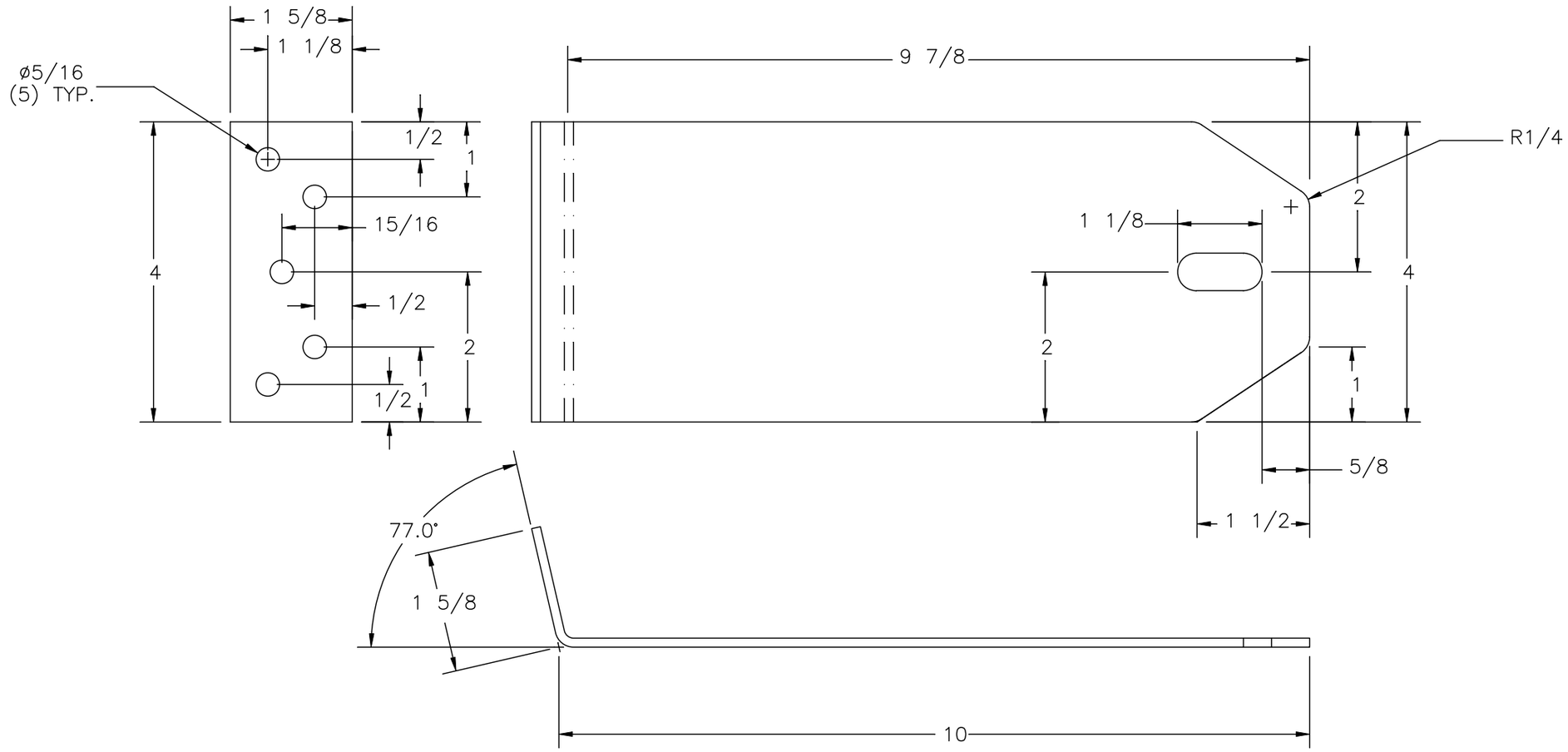

NOTES:
MATERIAL: STL 11GA.
FINISH: POWDERCOAT BLK

NEWMAR CORP P.O. Box 30, Nappanee, IN. 46550	Model: NADP	Sheet 1 OF 3	Drawn by: G. Y.	Checked by: M. N.	Revision: CHANGED MODEL DESCRIPTION BACK TO "NADP" ILO "SEE INDEX" PER (PCR #232209). (PCR #232279)	By: T. T. S. Date: VK 7/22/22
UNITS: INCHES TITLE BLOCK: 1-2FULTB	Title: HEADLIGHT SUPPORT BRACKET	I.D. # 2022\HE\PROFILE\NA\HDLT_BRKT	Date: 1/21/21	Date: 1/27/21	Revision: REMOVED SHEET 4 FOG LIGHT BRACKET AND CREATED SEPERATE PRINT AT: 2023\HE\PROFILE\NA\FGLT_BRKT. (PCR #232209)	By: T. T. S. Date: VK 7/15/22