ITEM #	QTY	NEWMAR #	DESCRIPTION
1	–	158705	BRKT HDLT LOW BASE

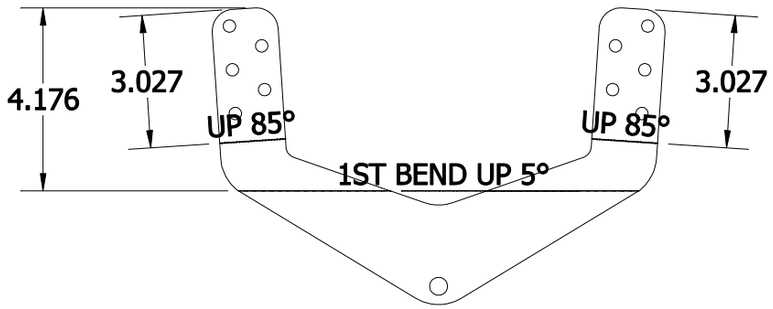

NOTE: FIRST BEND ACROSS ENTIRE PART. 3 BENDS TOTAL.

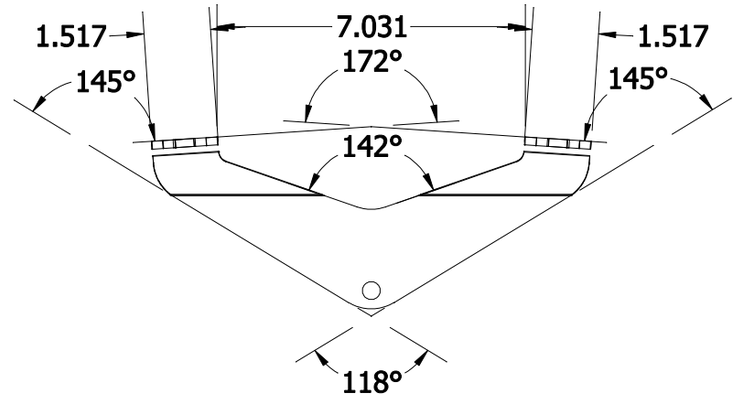

TOP VIEW

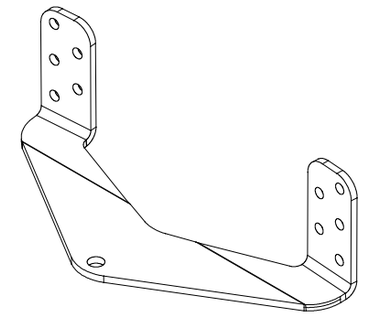

ISO VIEW

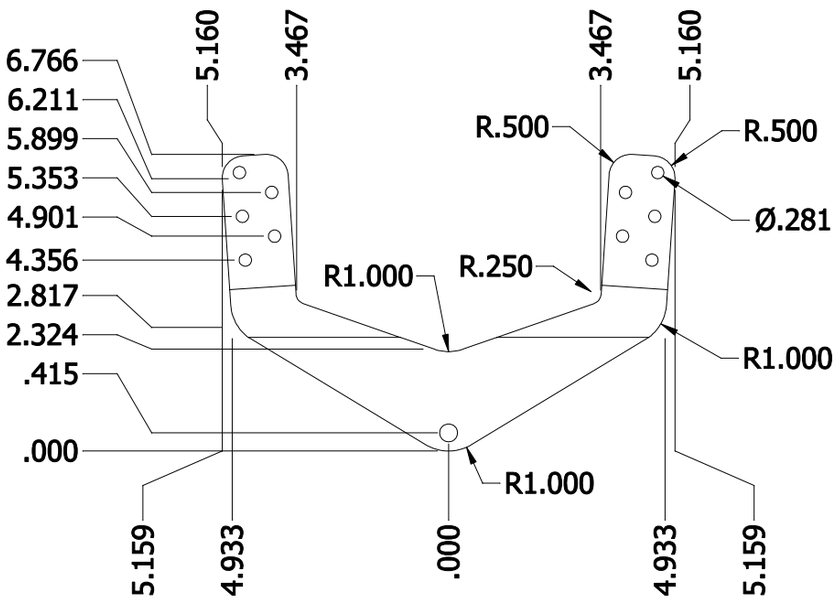

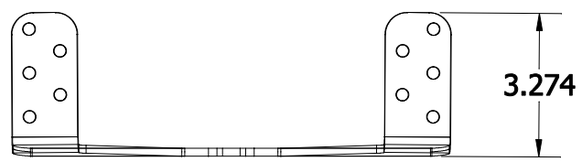

FRONT VIEW

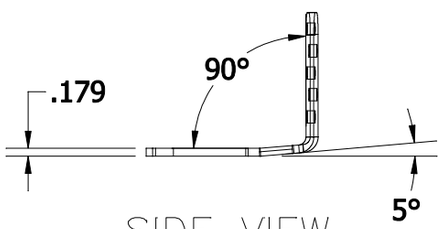

SIDE VIEW

NOTES:
1) 2 PER COACH (1 LEFT & 1 RIGHT)
2) FLAT STEEL (7 Ga.)

NEWMAR CORP P.O. Box 30, Nappanee, IN. 46550	Model: DSDP (SEE INDEX)	Sheet 1 OF 1	Drawn by: T. T. S.	Checked by: V. K.	Revision:	By:
						Date:
UNITS: INCHES	Title: HEADLIGHT BRACKETS LOWER	I.D. # 2023\DP\FRAME\PARTS\MISC7000	Date: 8/6/21	Date: 9/30/21	Revision:	By:
TITLE BLOCK: 1-2FULTB						Date: