ITEM #	QTY	NEWMAR #	DESCRIPTION
8	1	159375	CABINET WATER WORKS SS (FLAIR-IT PRO)
2	1	156694	COVER WATER BAY PANEL

THIS WATER WORKS PANEL #159375 IS USED WITH PART #159437 MANIFOLD 12-PORT FLAIR-IT PRO

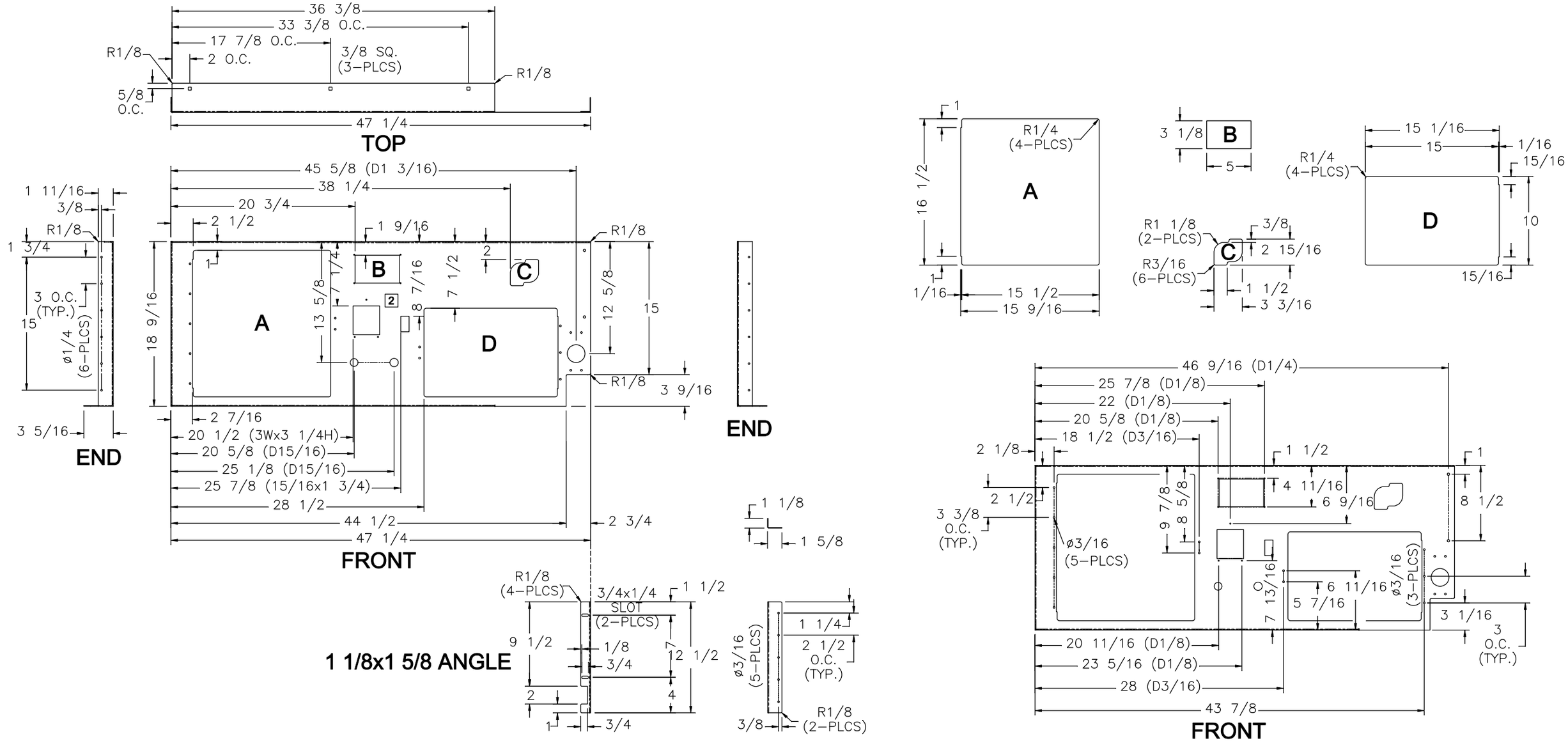

NEWMAR CORP P.O. Box 30, Nappanee, IN. 46550	Model: KG DB (SEE INDEX)	Sheet 5 OF 8	Drawn by: K. B.	Checked by: B. L. G.	Revision: UPDATE DRAWING, ADDING PAGES 5-8 FOR SUBSTITUE WATER WORKS PANELS #159375 AND MANIFOLD #159347 (ECO #356) — By: R. F. P. — Date:BLG 8/25/21
UNITS: INCHES TITLE BLOCK: 1TB	Title: WATER WORKS PANELS	I.D. # 2022\HE\CODE\PLUM\KG\WW_PNL	Date: 10/6/20	Date: 11/2/20	Revision: REPLACE PEX MANABLOC PART #63363 WITH PART #158402 MANABLOC, ELBOW SWIVELS PART #158403, CHANGE CABINET WTR WORKS TO #158404, IPO #156508, 3/4" HLS CHANGE TO 1 1/4"X3/4" HLS, (ECO #196) — By: R. F. P. — Date:BLG 6/21/21