CUT PATTERN	
BACK FRAME NO.	
BASE FRAME NO.	
WOOD PATTERN	

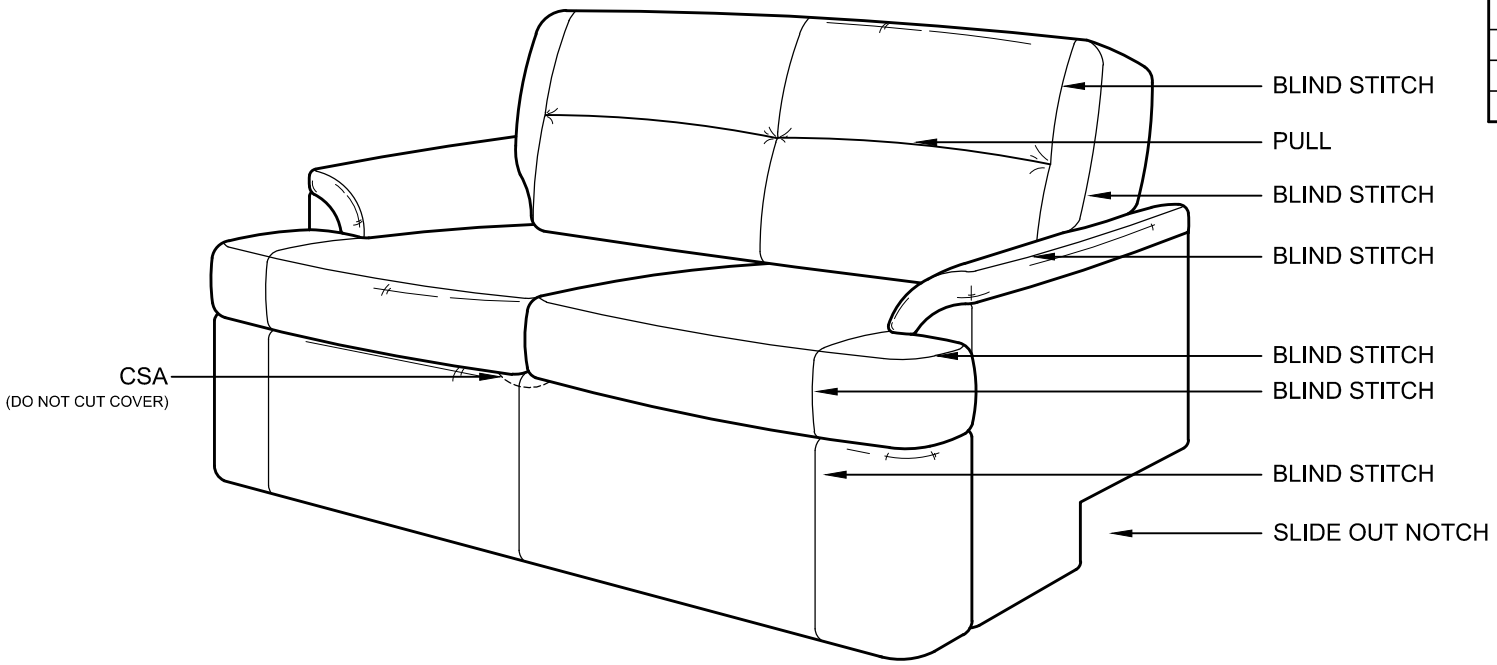

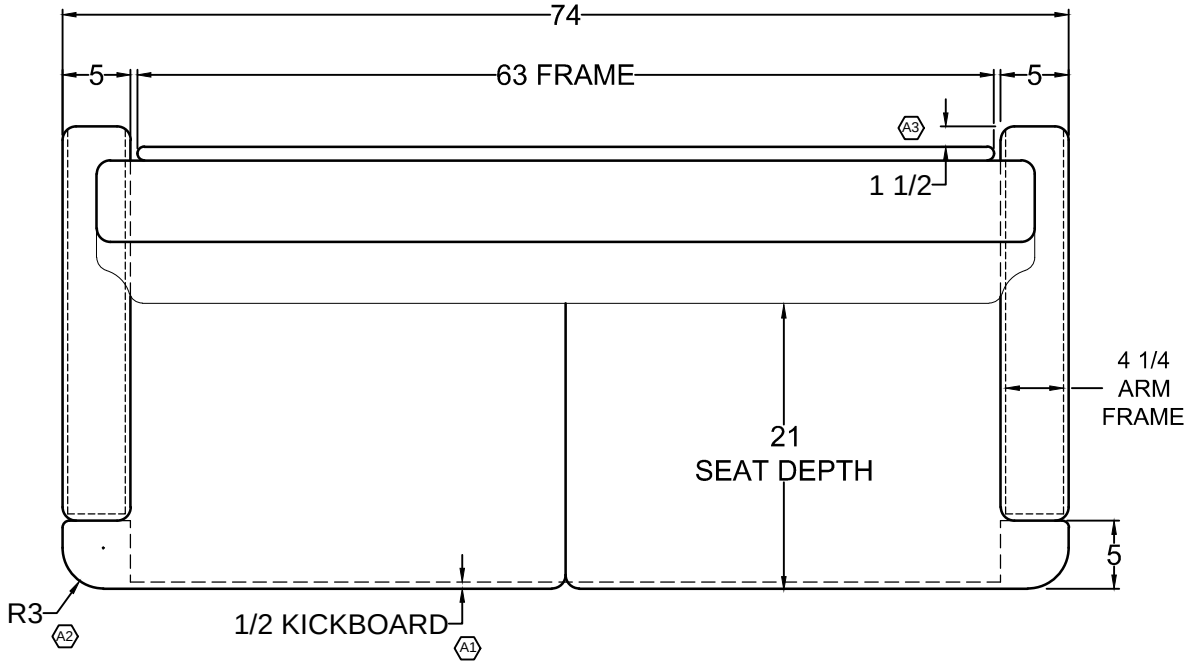

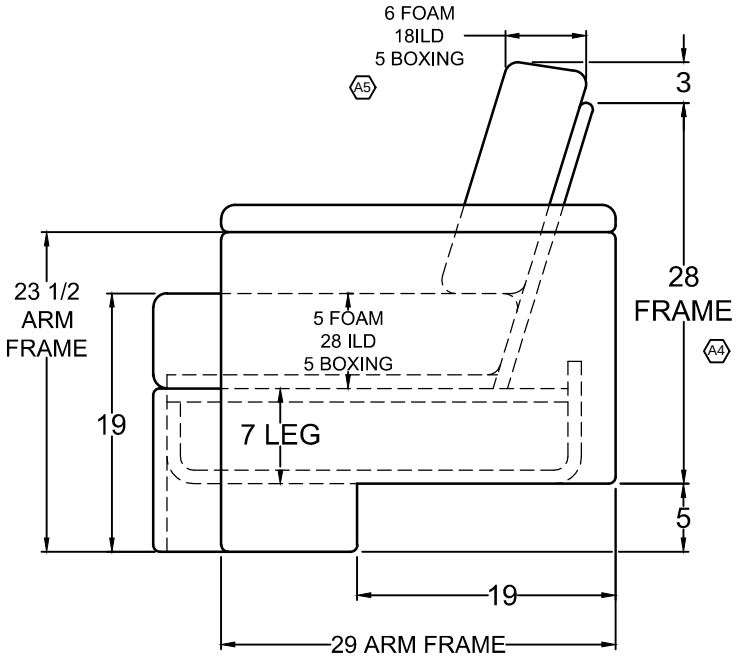

COMFORTFIT
BY VILLA INTERNATIONAL
13760 MIDWAY STREET
CERRITOS CA 90703
(562) 404-8111
FAX (562) 404-7781

TITLE	DWG. NO.	REV.	APV
2022 VTDP/SSCC CSA - 74" JACK KNIFE	CF2001066	A	-- -
	DR J.ANCHETA	DATE 09.24.2020	

SCALE 1:1
DO NOT SCALE DRAWING.
UNLESS OTHERWISE SPECIFIED DIMENSIONS ARE IN INCHES.

THIS DRAWING IS THE PROPERTY OF VILLA INTERNATIONAL MFG. ALL RIGHTS RESERVED.

JA	A	PRODUCTION UPDATE: [1] ADD 1/2" KB DEPTH DIM TO DRAWING. [2] ADD 3 RADIUS DIM TO T-CUSHION. [3] ADD 1-1/2" CLEARANCE FROM BACK OF FRAME TO BACK OF ARMS. [4] CHANGE FRAME HEIGHT TO 28"; WAS 26". [5] CHANGE BACK PILLOW FOAM DETAILS TO 6 FOAM & 5 BOXING; WAS 5 FOAM & 4 BOXING.	03.16.21

REVISIONS