ITEM #	QTY	NEWMAR #	DESCRIPTION
1	1	160397	DASH INSTRUMENT PANEL GRYWD

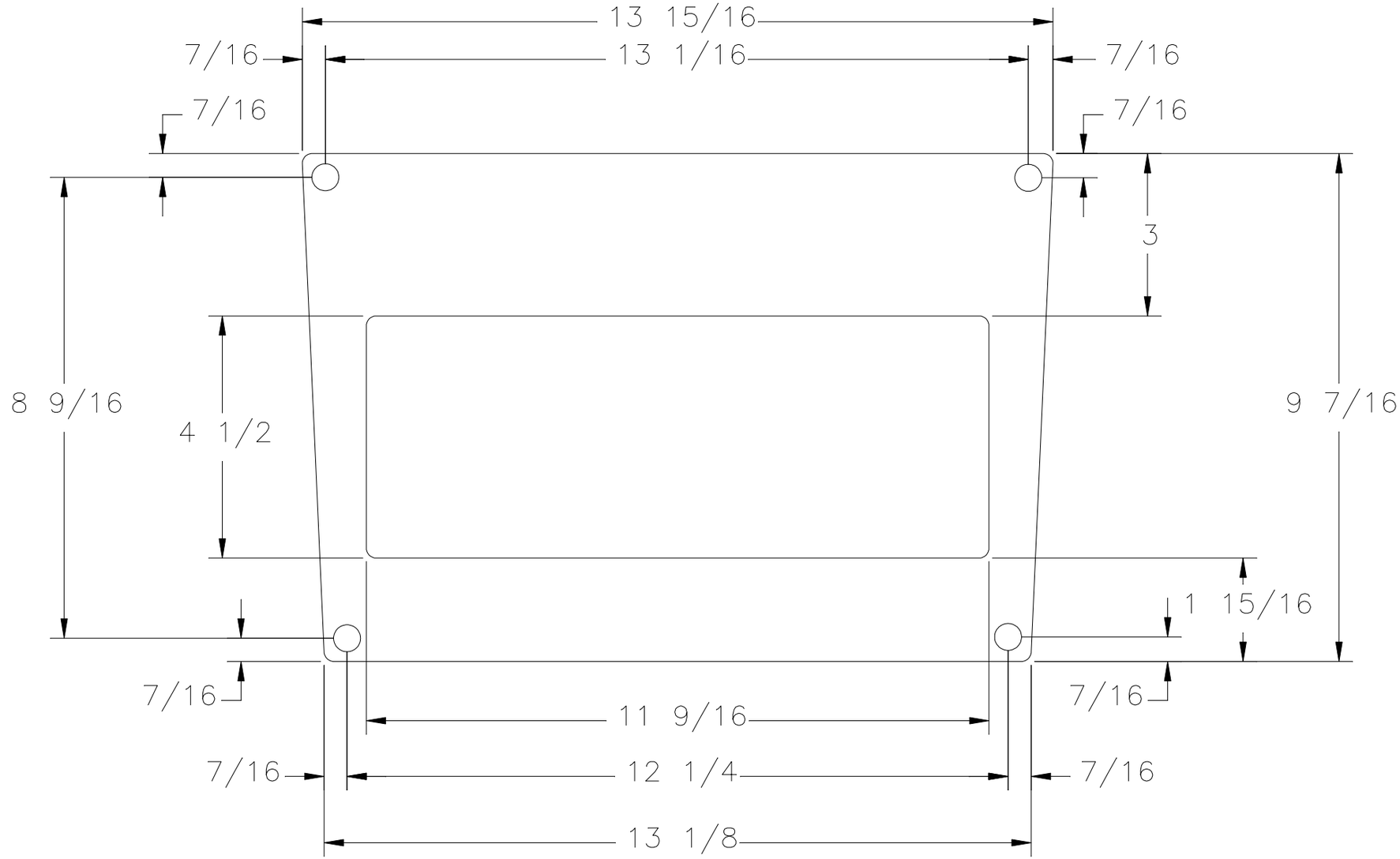

NEWMAR CORP P.O. Box 30, Nappanee, IN. 46550	Model: DS DP	Sheet 1 OF 1	Drawn by: T. T. S.	Checked by:	Revision:	By:
						Date:
UNITS: INCHES	Title:	I.D. # 2023\COMPONENTS\160397	Date: 8/30/21	Date:	Revision:	By:
TITLE BLOCK: 1TB	DASH INSTRUMENT PANEL					Date: