ITEM #	QTY	NEWMAR #	DESCRIPTION
1	1	160828	PANEL INSTRUMENT BLUE STEEL
2	2	160644	DASH LOUVER 6-3/8X1-1/2
3	2	161215	SHROUD DASH VENT ABS BLK 23NA

ITEMS 2 & 3 COME INSTALLED ON ITEM 1

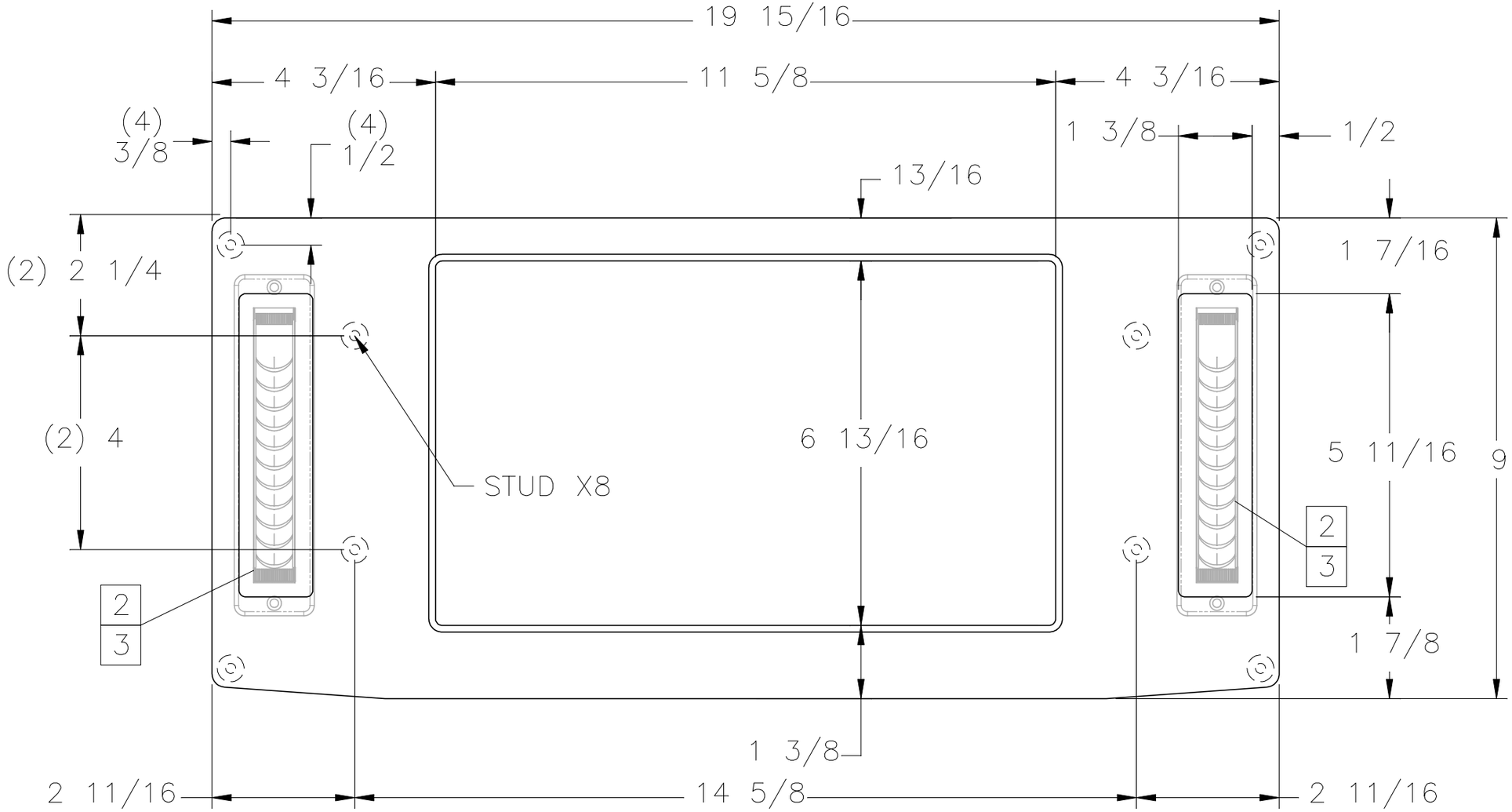

NEWMAR CORP P.O. Box 30, Nappanee, IN. 46550	Model: (C965) NADP	Sheet 1 OF 1	Drawn by: G. Y.	Checked by: M. N.	Revision: REVERT INSTRUMENT PANEL CONFIGURATION BACK TO ORIGINAL RELEASE OF 1/5/22. PCR #231797 ONLY RELEASED TO ADD LOUVERS & VENT SHROUD. (PCR #231919)	By: G. Y. Date:EC 6/10/22
UNITS: INCHES	Title: INSTRUMENT PANEL SPARTAN	I.D. # 2023\COMPONENTS\PANEL_21	Date: 1/5/22	Date: 1/5/22	Revision: UPDATED INSTRUMENT PANEL & ADD LOUVERS & VENT SHROUDS (PCR #231797)	By: G. Y. Date:EC 6/1/22
TITLE BLOCK: 1TB						