ITEM #	QTY	NEWMAR #	DESCRIPTION
1	1	160761	TRIM KIT SS FRONT BUMPER 23DS
2	1	160762	TRIM KIT SS REAR ENGINE 23DS

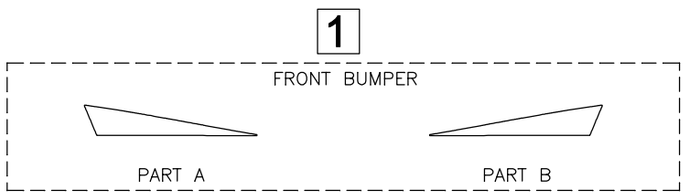

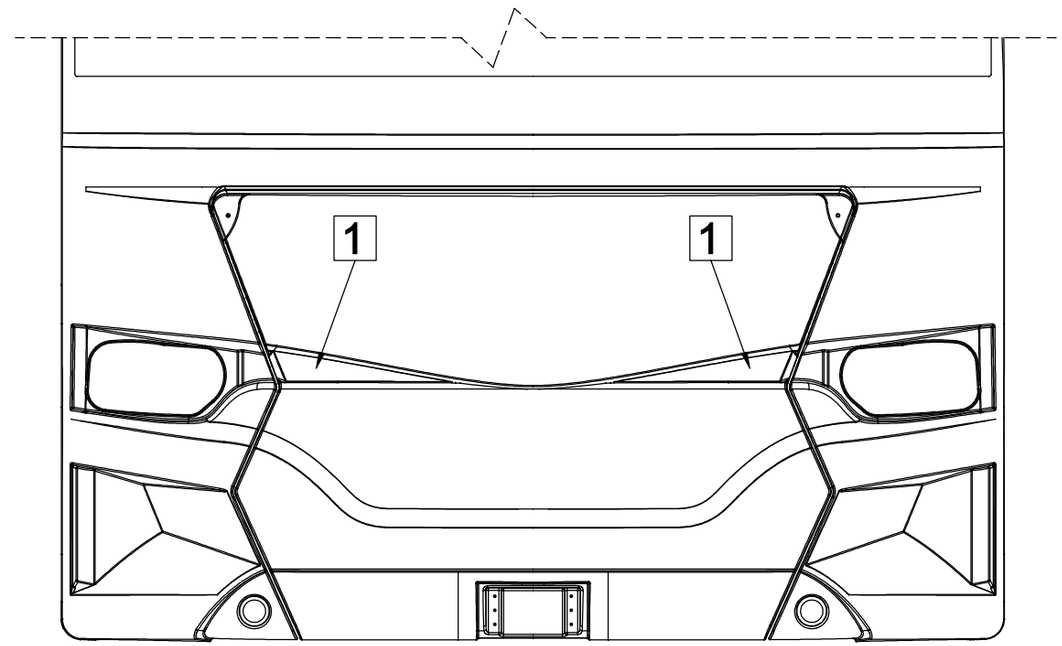

NEWMAR CORP P.O. Box 30, Nappanee, IN. 46550	Model: DS DP	Sheet 1 OF 2	Drawn by: T. T. S.	Checked by: V. K.	Revision:	By:
						Date:
Title block--5TB	Title: STAINLESS TRIM	I.D. # 2023\DP\PROFILE\DS\DS_SS_TRIM	Date: 9/3/21	Date: 10/1/21	Revision:	By:
						Date: