ITEM #	QTY	NEWMAR #	DESCRIPTION
1	1	161508	LATCH ENGINE DOOR 11.5

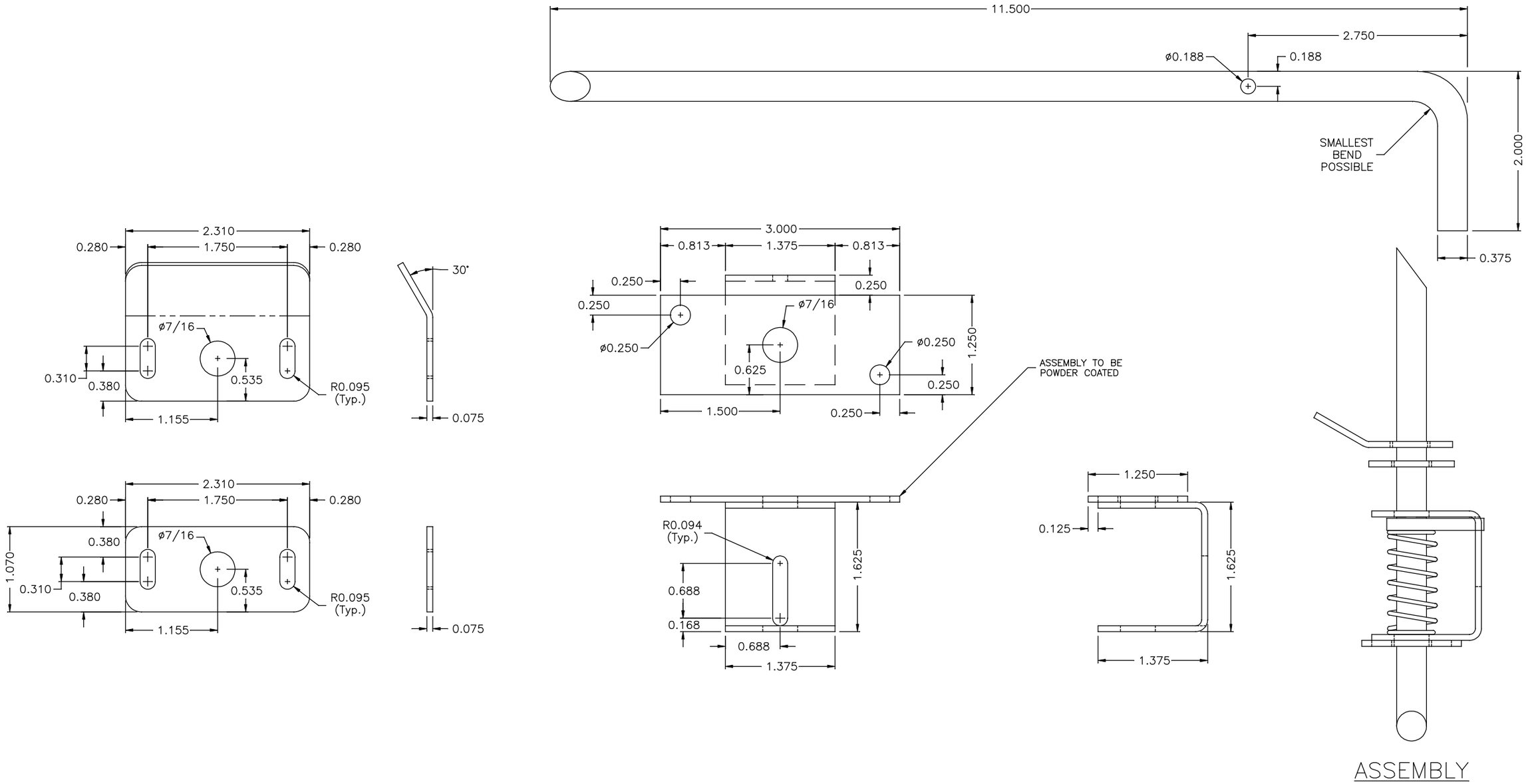

(SEE INDEX)

REAR ENGINE DOOR LATCH

1 OF 1 T. S. B. B.

2023\HE\FRAME\PARTS\EX_ENG_DOOR_LATCH 11/1/21 11/2/21

NEW PRINT CREATED DUE TO LATCH BEING 11 1/2 ILO 15 1/4 FOR LIFECYCLE CHANGE (PCR #230118) T. S. BB 11/2/21